| PETROBRAS | DRAWING | No. I-DE-3010.00-5140-700-P4X-003 |
|---|---|---|
| | CLIENT: | SHEET: 1 of 33 |
| | JOB: | |
| | AREA: | |
| E SRGE | TITLE: GROUNDING INSTALLATION TYPICAL DETAILS | INTERNAL ESUP |

MICROSTATION/V.8i/ I-DE-3010.00-5140-700-P4X-003_E.dgn

E

## INDEX OF REVISIONS

| REV. | DESCRIPTION AND / OR REVISED SHEETS |
|---|---|
| 0 | ORIGINAL ISSUE |
| A | REVISED WHERE INDICATED. |
| B | REVISED WHERE INDICATED. |
| C | REVISED ACCORDING TO CONSISTENCY ANALYSIS |
| D | REVISED ACCORDING TO CONSISTENCY ANALYSIS |
| E | REVISED WHERE INDICATED. |

| | REV. 0 | REV. A | REV. B | REV. C | REV. D | REV. E | REV. F | REV. G | REV. H |
|---|---|---|---|---|---|---|---|---|---|
| DATE | SEP/14/18 | JUL/23/19 | MAR/17/20 | JUL/22/20 | AUG/05/20 | SEP/03/20 | | | |
| DESIGN | ESUP | ESUP | ESUP | ESUP | ESUP | EEI | | | |
| EXECUTION | MARCELO BP | LSFERREIRA.TGP | MARCELO BP | MARCELO BP | MARCELO BP | CSJP | | | |
| CHECK | GISMO | MARCELO BP | THIAGOVINHA | THIAGOVINHA | FABIO.P | CQJO | | | |
| APPROVAL | MATTOSO | REGGIANI | REGGIANI | REGGIANI | REGGIANI | UQBE | | | |

INFORMATION IN THIS DOCUMENT IS PROPERTY OF PETROBRAS, BEING PROHIBITED OUTSIDE OF THEIR PURPOSE.

FORM OWNED TO PETROBRAS N-381 REV. L.

| PETROBRAS | DRAWING | No. I-DE-3010.00-5140-700-P4X-003 | REV. E |
|---|---|---|---|
| | AREA: | SHEET: 2 of 33 | |
| | TITLE: GROUNDING INSTALLATION TYPICAL DETAILS | INTERNAL | |
| | | ESUP | |

E

## INDEX


| TYPICAL NUMBER. | DESCRIPTION | PAGE |
|---|---|---|
| E 301 | PUSH BUTTON (NON METALLIC MATERIAL) AND MOTOR GROUNDING | 3 |
| E 302 | SKID GROUNDING | 4 |
| E 303 | VESSELS AND TANKS GROUNDING | 5 |
| E 304 | MEDIUM AND LOW-VOLTAGE MCC OR SWITCHGEAR, TRANSFORMER AND RESISTOR GROUNDING | 6 |
| E 305 | ELECTRICAL PANEL GROUNDING | 7 |
| E 306 | LIFEBOAT DAVIT GROUNDING | 8/9 |
| E 307 | METALLIC LIGHTING FIXTURE GROUNDING | 10 |
| E 308 | SOCKET-OUTLETS GROUNDING | 11 |
| E 309 | METALLIC PIPE AND FLANGE GROUNDING | 12 |
| E 310 | NON-METALLIC PIPE GROUNDING | 13 |
| E 311 | METALLIC CABLE TRAY GROUNDING | 14 |
| E 312 | METALLIC CABLE TRAY IN ENVIRONMENT TRANSITION | 15 |
| E 313 | METALLIC GRATING GROUNDING | 16 |
| E 314 | MODULE COLUMN BASE (STOOL) GROUNDING | 17 |
| E 315 | JUNCTION BOX GROUNDING | 18 |
| E 316 | MODULE GROUNDING BAR AND GROUNDING BOSS | 19 |
| E 317 | MEDIUM-VOLTAGE MULTI-CORE ARMOURED GROUNDING | 20 |
| E 318 | MEDIUM-VOLTAGE SINGLE-CORE ARMOURED CABLE GROUNDING | 21 |
| E 319 | LOW-VOLTAGE MULTI-CORE ARMOURED CABLE GROUNDING | 22 |
| E 320 | LOW-VOLTAGE SINGLE-CORE ARMOURED CABLE GROUNDING | 23 |
| E 321 | CONTROL MULTI-CORE ARMOURED CABLE GROUNDING | 24 |
| E 322 | CONTROL MULTI-CORE NON-ARMOURED CABLE GROUNDING NON-METALLIC CABLE GLAND/MCT | 25 |
| E 323 | LOW-VOLTAGE MULTI-CORE NON-ARMOURED CABLE GROUNDING NON-METALLIC CABLE GLAND/MCT | 26 |
| E 324 | VENTILATION DUTY GROUNDING | 27 |
| E 325 | DETAIL OF LOW-VOLTAGE SHIELD GROUNDING FOR NON-METALLIC CABLE GLAND | 28 |
| E 326 | INTERNAL PANEL GROUNDING BARS | 29 |
| E 327 | CABLE GLAND FOR CONTROL CABLE | 30 |
| E 328 | TABLE OF RECOMMENDED BONDING | 31 |
| | GENERAL NOTES | 32 |
| | GENERAL NOTES | 33 |


E

| PETROBRAS | DRAWING | No. I-DE-3010.00-5140-700-P4X-003 | REV. E |
|---|---|---|---|
| | AREA: | SHEET: 3 of 33 | |
| | TITLE: GROUNDING INSTALLATION TYPICAL DETAILS | INTERNAL | |
| | | ESUP | |

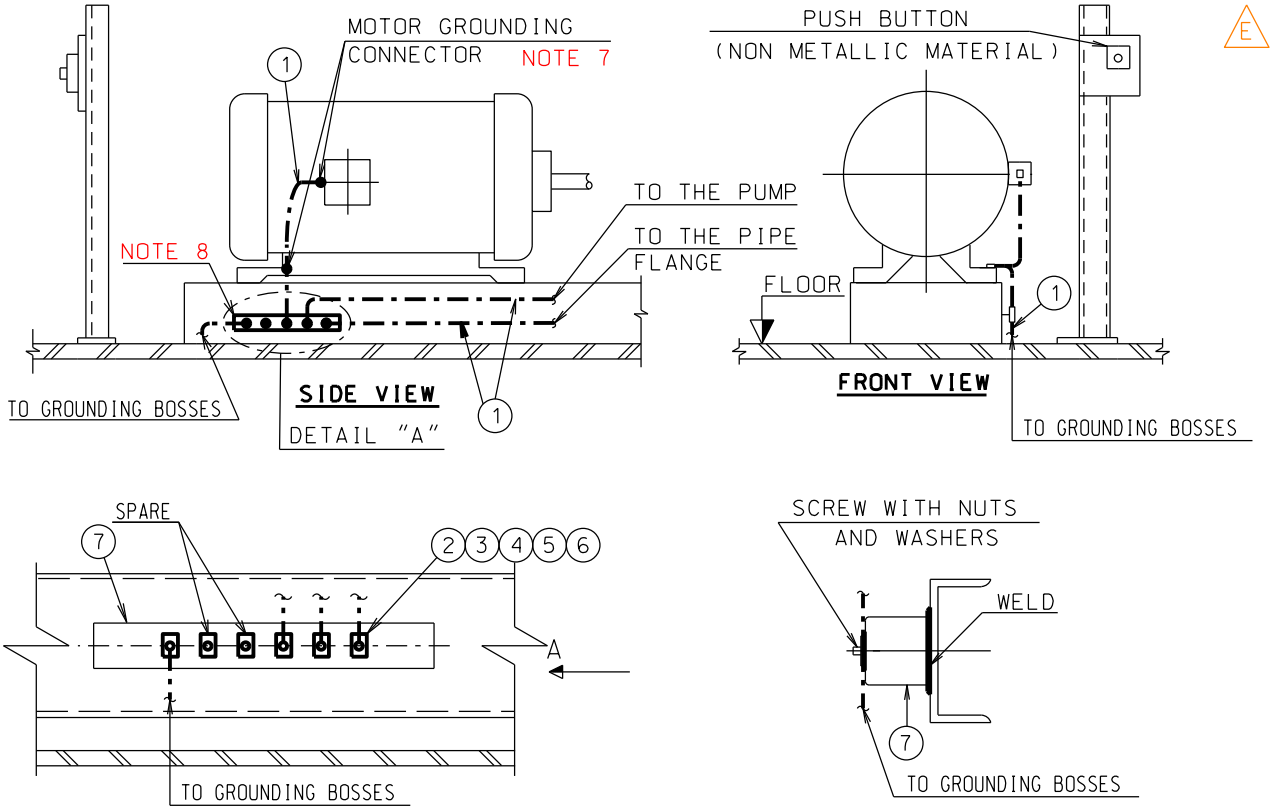


DETAIL "A"

| GENERAL AREA | | SYMBOLOGY | | SYMBOLOGY | | SYMBOLOGY | |
|---|---|---|---|---|---|---|---|
| ITEM | MATERIAL DESCRIPTION | E 301/1 | QT. | | QT. | | QT. |
| 1 | GROUNDING COPPER CABLE | NOTES 2 AND 8 | * | | | | |
| 2 | TERMINAL CONNECTOR | NOTES 1 AND 2 | 6 | | | | |
| 3 | HEXAGON HEAD SCREW | NOTES 4 AND 5 | * | | | | |
| 4 | FLAT WASHER | NOTES 4 AND 5 | * | | | | |
| 5 | LOCK WASHER | NOTES 4 AND 5 | * | | | | |
| 6 | HEXAGON NUT | NOTES 4 AND 5 | * | | | | |
| 7 | GROUNDING BAR | NOTES 5 AND 19 | 1 | | | | |
| 8 | TERMINAL CONNECTOR | NOTE 1 | * | | | | |
| 9 | | | | | | | |
| 10 | | | | | | | |
| 11 | | | | | | | |
| 12 | | | | | | | |
| 13 | | | | | | | |
| 14 | | | | | | | |

| PUSH BUTTON (NON METALLIC MATERIAL) AND MOTOR GROUNDING | E 301 |
|---|---|

| PETROBRAS | DRAWING | No. I-DE-3010.00-5140-700-P4X-003 | REV. E |
|---|---|---|---|
| | AREA: | SHEET: 4 of 33 | |
| | TITLE: GROUNDING INSTALLATION TYPICAL DETAILS | INTERNAL ESUP | |

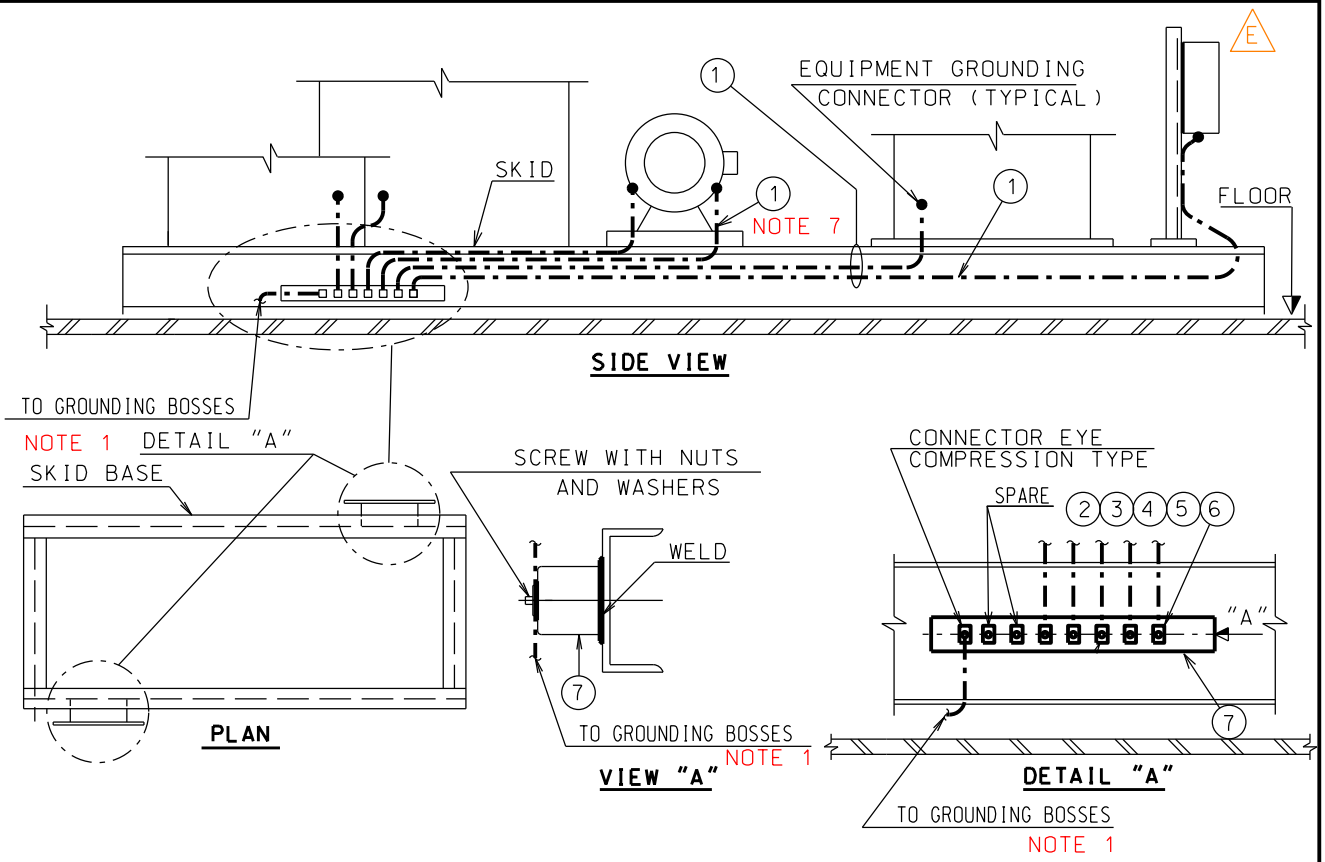


SEE NOTE 8

| GENERAL AREA | | SYMBOLOGY | | SYMBOLOGY | | SYMBOLOGY | |
|---|---|---|---|---|---|---|---|
| ITEM | MATERIAL DESCRIPTION | E 302/1 | QT. | | QT. | | QT. |
| 1 | GROUNDING COPPER CABLE | NOTES 2, 7 AND 8 | * | | | | |
| 2 | TERMINAL CONNECTOR | NOTE 1 | 16 | | | | |
| 3 | HEXAGON HEAD SCREW | NOTES 4 AND 5 | * | | | | |
| 4 | FLAT WASHER | NOTES 4 AND 5 | * | | | | |
| 5 | LOCK WASHER | NOTES 4 AND 5 | * | | | | |
| 6 | HEXAGON NUT | NOTES 4 AND 5 | * | | | | |
| 7 | GROUNDING BAR | NOTES 5 AND 19 | 2 | | | | |
| 8 | | | | | | | |
| 9 | | | | | | | |
| 10 | | | | | | | |
| 11 | | | | | | | |
| 12 | | | | | | | |
| 13 | | | | | | | |
| 14 | | | | | | | |

| SKID GROUNDING | E 302 |
|---|---|

| PETROBRAS | DRAWING | No. I-DE-3010.00-5140-700-P4X-003 | REV. E |
|---|---|---|---|
| | AREA: | SHEET: 5 of 33 | |
| | TITLE: GROUNDING INSTALLATION TYPICAL DETAILS | INTERNAL | |
| | | ESUP | |

E

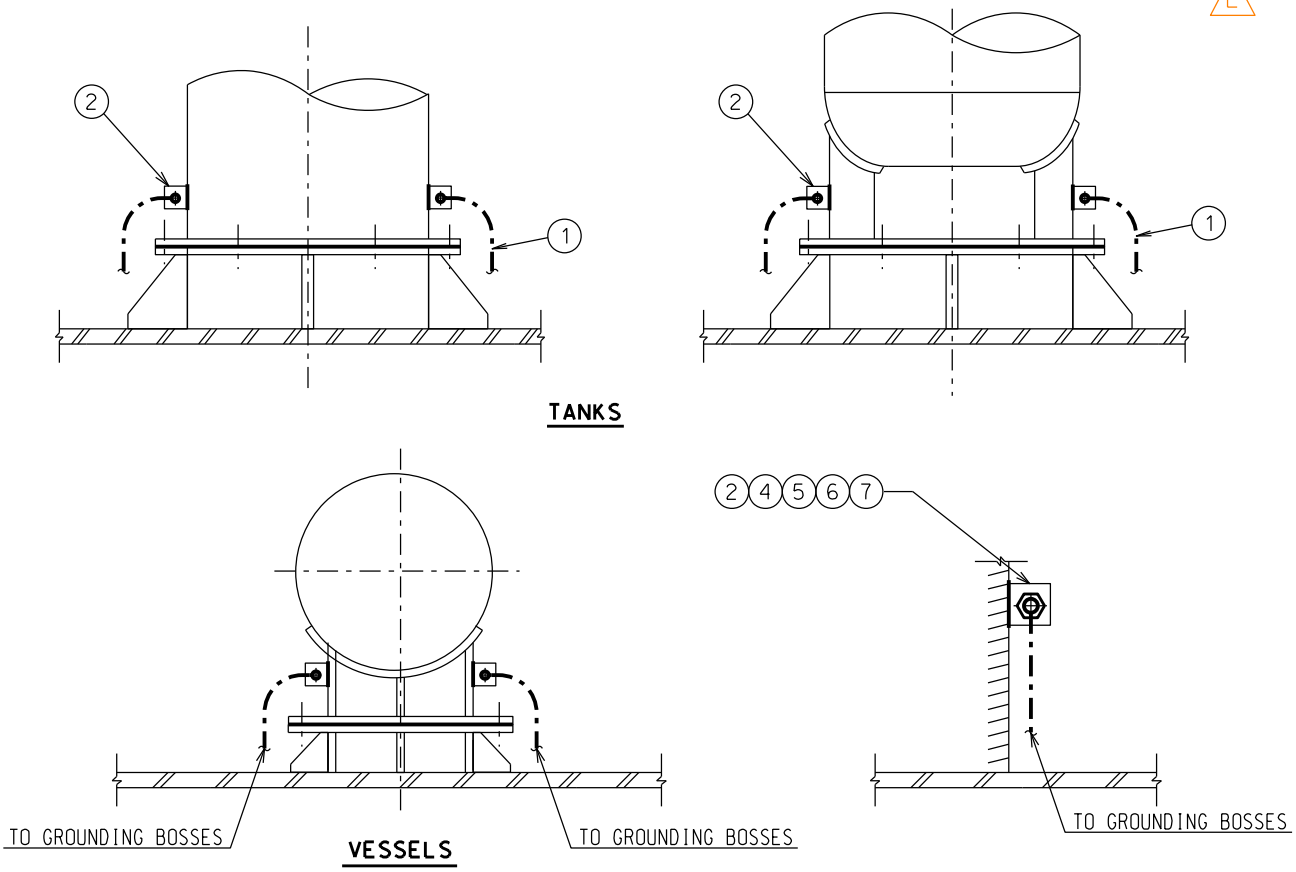


TO FIND OUT GROUNDING NEED SEE TABLE ON PAGE 31
SEE NOTE 1 AND 8
SEE E316/2

| GENERAL AREA | | SYMBOLOGY | | SYMBOLOGY | | SYMBOLOGY | |
|---|---|---|---|---|---|---|---|
| ITEM | MATERIAL DESCRIPTION | E 303/1 | QT. | | QT. | | QT. |
| 1 | GROUNDING COPPER CABLE | NOTES 2 AND 8 | * | | | | |
| 2 | S. STEEL 316L PLATE (100x100x6,3mm) | NOTES 3 AND 19 | 2 | | | | |
| 3 | | | | | | | |
| 4 | HEXAGON HEAD SCREW | NOTES 4 AND 5 | * | | | | |
| 5 | FLAT WASHER | NOTES 4 AND 5 | * | | | | |
| 6 | LOCK WASHER | NOTES 4 AND 5 | * | | | | |
| 7 | HEXAGON NUT | NOTES 4 AND 5 | * | | | | |
| 8 | | | | | | | |
| 9 | | | | | | | |
| 10 | | | | | | | |
| 11 | | | | | | | |
| 12 | | | | | | | |
| 13 | | | | | | | |
| 14 | | | | | | | |

| VESSELS AND TANKS GROUNDING | E 303 |
|---|---|

| PETROBRAS | DRAWING | No. I-DE-3010.00-5140-700-P4X-003 | REV. E |
|---|---|---|---|
| | AREA: | SHEET: 6 of 33 | |
| | TITLE: GROUNDING INSTALLATION TYPICAL DETAILS | INTERNAL | |
| | | ESUP | |

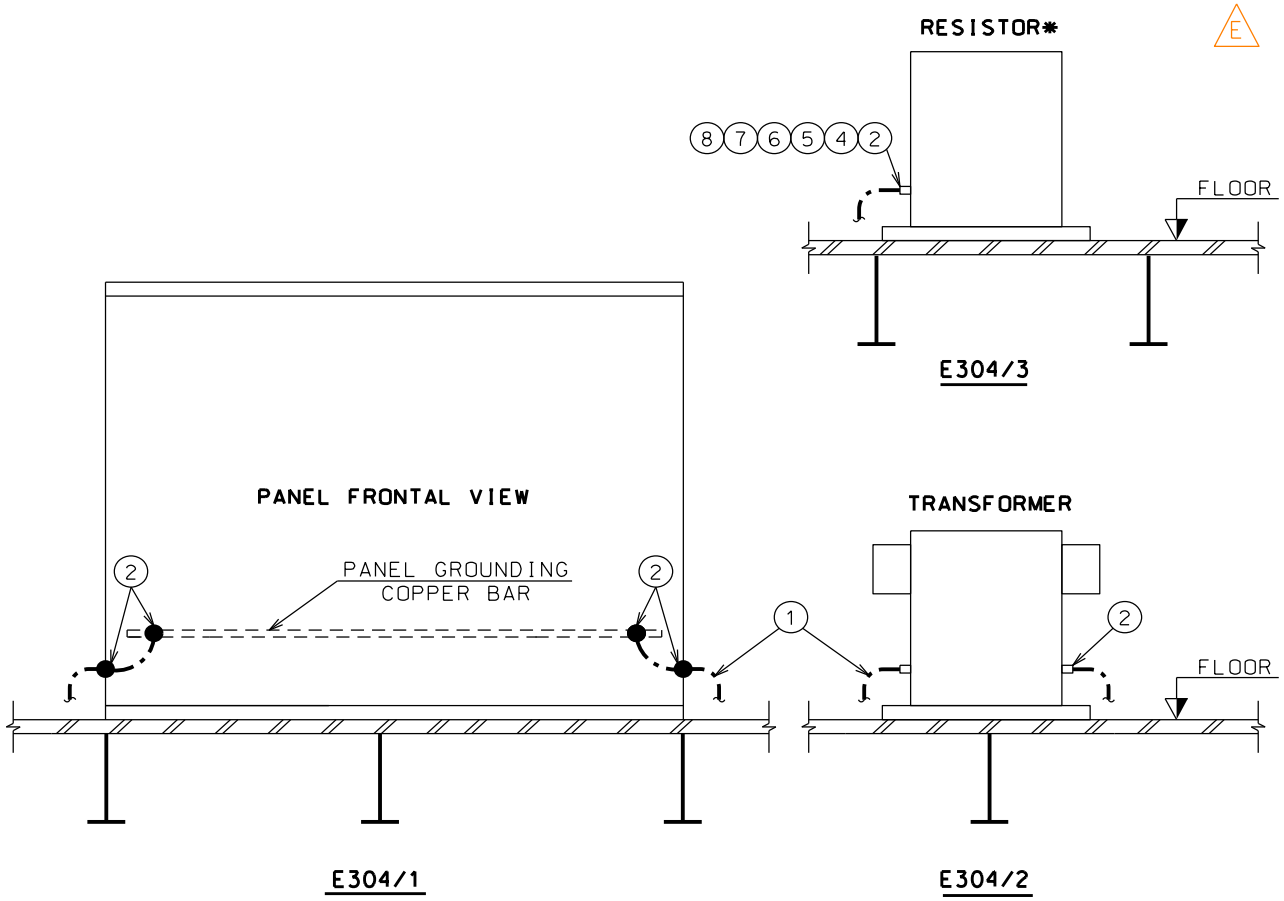


NOTE 29

| GENERAL AREA | | SYMBOLOGY | | SYMBOLOGY | | SYMBOLOGY | |
|---|---|---|---|---|---|---|---|
| ITEM | MATERIAL DESCRIPTION | E 304/1 | QT. | E 304/2 | QT. | E 304/3 | QT. |
| 1 | GROUNDING COPPER CABLE | NOTES 2 AND 8 | * | NOTE 2 | * | NOTE 2 | * |
| 2 | TERMINAL CONNECTOR | NOTE 1 | * | NOTE 1 | * | NOTE 1 | * |
| 3 | | | | | | | |
| 4 | TERMINAL CONNECTOR | NOTE 1 | * | NOTE 1 | * | NOTE 1 | 1 |
| 5 | HEXAGON HEAD SCREW | NOTES 4 AND 5 | * | NOTES 4 AND 5 | | NOTES 4 AND 5 | |
| 6 | FLAT WASHER | NOTES 4 AND 5 | * | NOTES 4 AND 5 | | NOTES 4 AND 5 | |
| 7 | LOCK WASHER | NOTES 4 AND 5 | * | NOTES 4 AND 5 | | NOTES 4 AND 5 | |
| 8 | HEXAGON NUT | NOTES 4 AND 5 | * | NOTES 4 AND 5 | | NOTES 4 AND 5 | |
| 9 | | | | | | | |
| 10 | | | | | | | |
| 11 | | | | | | | |
| 12 | | | | | | | |
| 13 | | | | | | | |
| 14 | | | | | | | |

| MEDIUM AND LOW-VOLTAGE MCC OR SWITCHGEAR, TRANSFORMER AND RESISTOR GROUNDING | E 304 |
|---|---|

| PETROBRAS | DRAWING | No. I-DE-3010.00-5140-700-P4X-003 | REV. E |
|---|---|---|---|
| | AREA: | SHEET: 7 of 33 | |
| | TITLE: GROUNDING INSTALLATION TYPICAL DETAILS | INTERNAL | |
| | | ESUP | |

E

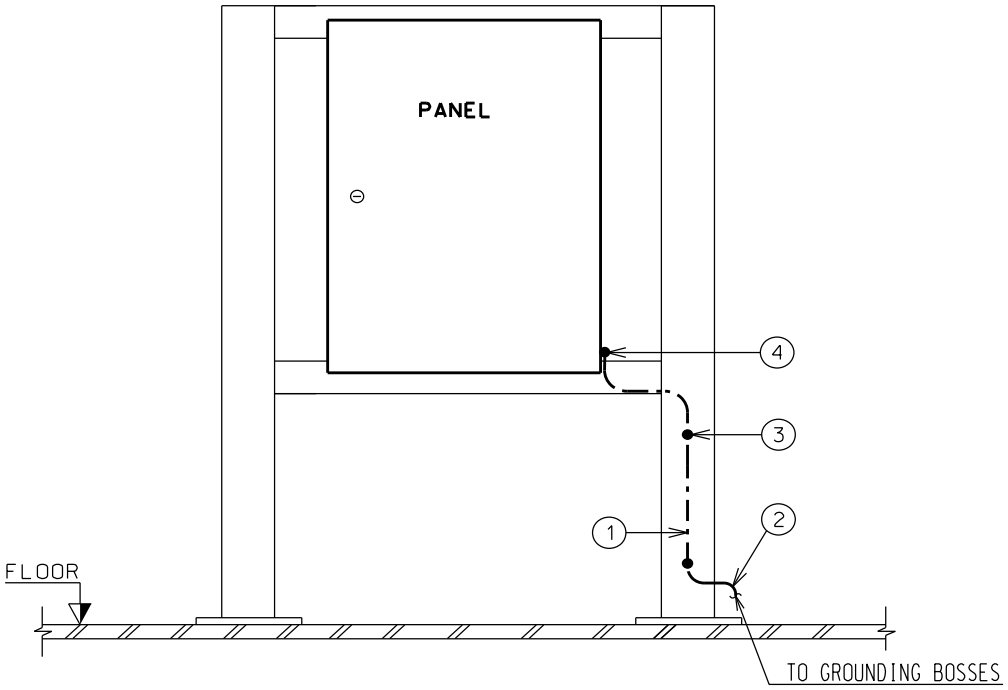


NOTE 26

| GENERAL AREA | | SYMBOLOGY | | SYMBOLOGY | | SYMBOLOGY | |
|---|---|---|---|---|---|---|---|
| ITEM | MATERIAL DESCRIPTION | E 305/1 | QT. | | QT. | | QT. |
| 1 | GROUNDING COPPER CABLE | NOTES 2 AND 8 | * | | | | |
| 2 | | | | | | | |
| 3 | TERMINAL CONNECTOR | NOTE 1 | 2 | | | | |
| 4 | TERMINAL CONNECTOR | NOTE 1 | 1 | | | | |
| 5 | | | | | | | |
| 6 | | | | | | | |
| 7 | | | | | | | |
| 8 | | | | | | | |
| 9 | | | | | | | |
| 10 | | | | | | | |
| 11 | | | | | | | |
| 12 | | | | | | | |
| 13 | | | | | | | |
| 14 | | | | | | | |

| ELECTRICAL PANEL GROUNDING | E 305 |
|---|---|

| PETROBRAS | DRAWING | No. I-DE-3010.00-5140-700-P4X-003 | REV. E |
|---|---|---|---|
| | AREA: | | SHEET: 8 of 33 |
| | TITLE: GROUNDING INSTALLATION TYPICAL DETAILS | | INTERNAL ESUP |

E

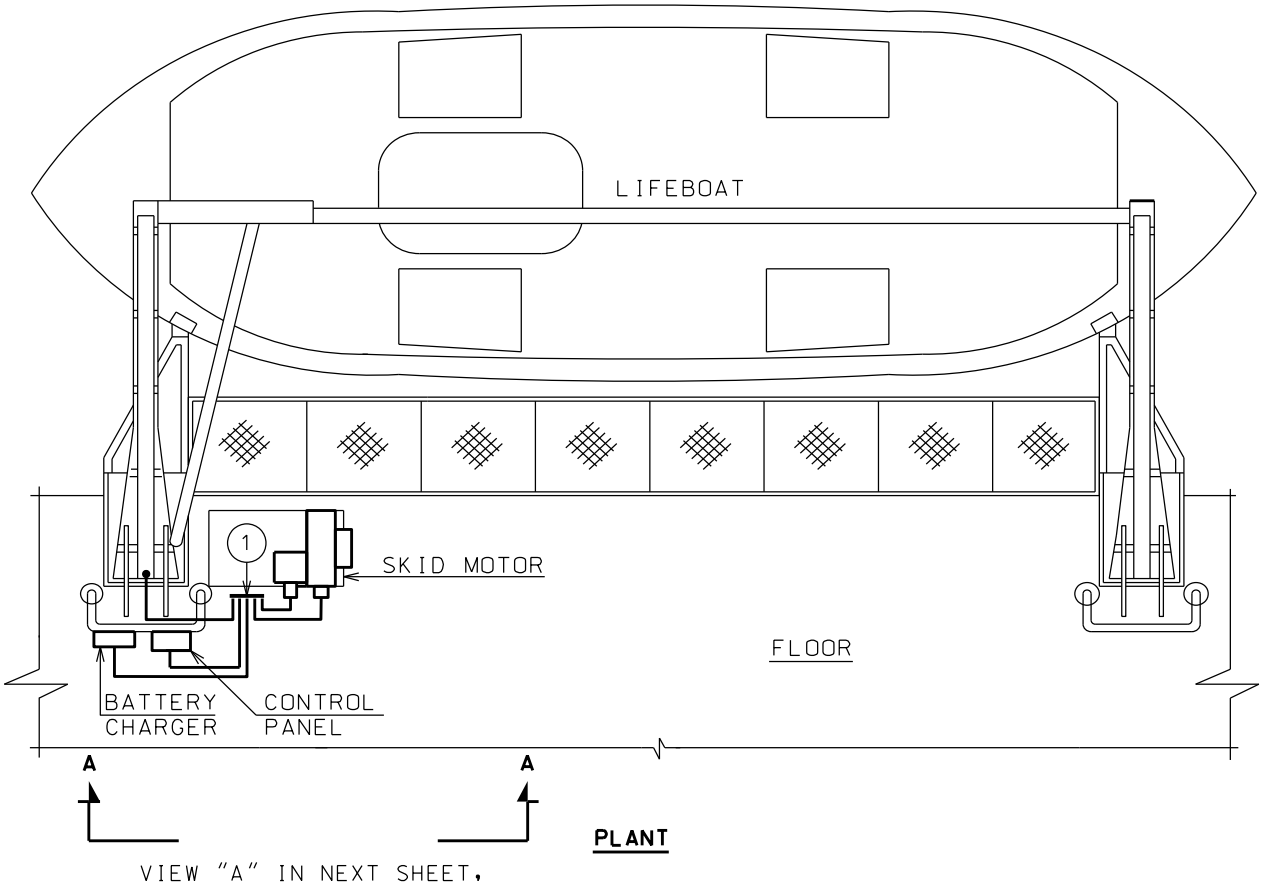


| GENERAL AREA | | SYMBOLOGY | | SYMBOLOGY | | SYMBOLOGY | |
|---|---|---|---|---|---|---|---|
| ITEM | MATERIAL DESCRIPTION | E 306/1 | QT. | | QT. | | QT. |
| 1 | GROUNDING BAR | NOTES 5, 8 AND NOTE 19 | 1 | | | | |
| 2 | TERMINAL CONNECTOR | NOTE 1 | * | | | | |
| 3 | HEXAGON HEAD SCREW | NOTES 4 AND 5 | * | | | | |
| 4 | FLAT WASHER | NOTES 4 AND 5 | * | | | | |
| 5 | LOCK WASHER | NOTES 4 AND 5 | * | | | | |
| 6 | HEXAGON NUT | NOTES 4 AND 5 | * | | | | |
| 7 | GROUNDING COPPER CABLE | NOTES 2 AND 8 | * | | | | |
| 8 | | | | | | | |
| 9 | | | | | | | |
| 10 | | | | | | | |
| 11 | | | | | | | |
| 12 | | | | | | | |
| 13 | | | | | | | |
| 14 | | | | | | | |

| LIFEBOAT DAVIT GROUNDING | E 306 |
|---|---|

| PETROBRAS | DRAWING | No. I-DE-3010.00-5140-700-P4X-003 | REV. E |
|---|---|---|---|
| | AREA: | SHEET: 9 of 33 | |
| | TITLE: GROUNDING INSTALLATION TYPICAL DETAILS | INTERNAL | |
| | | ESUP | |

E

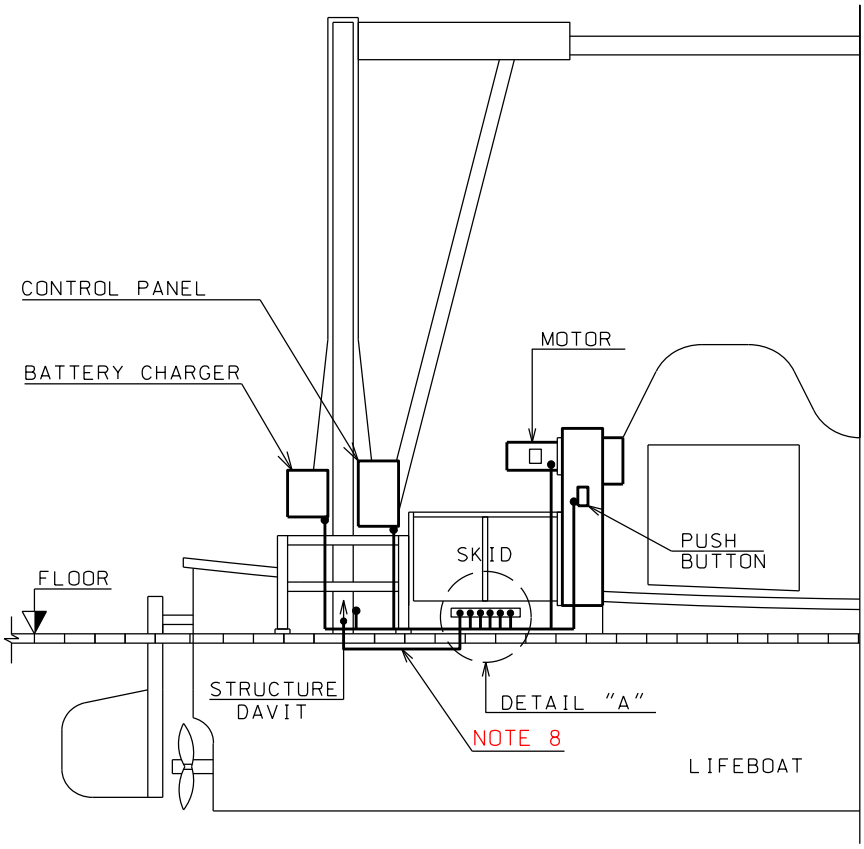


**VIEW "A"**

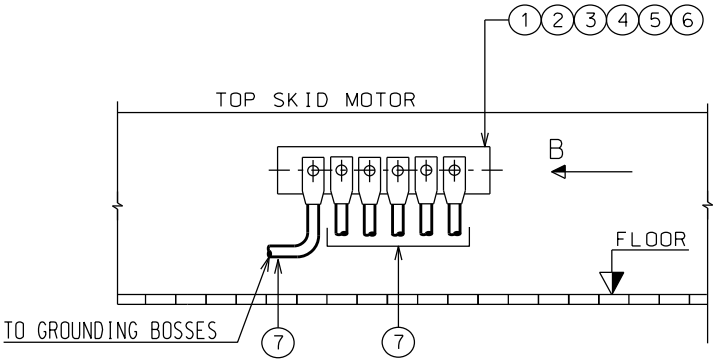


**DETAIL "A"**

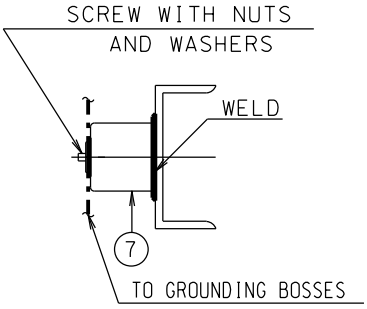


**VIEW "B"**

MATERIAL DESCRIPTION IN PREVIOUS SHEET.

| LIFEBOAT DAVIT GROUNDING | E 306 |
|---|---|

| PETROBRAS | DRAWING | No. I-DE-3010.00-5140-700-P4X-003 | REV. E |
|---|---|---|---|
| | AREA: | SHEET: 10 of 33 | |
| | TITLE: GROUNDING INSTALLATION TYPICAL DETAILS | INTERNAL | |
| | | ESUP | |

E

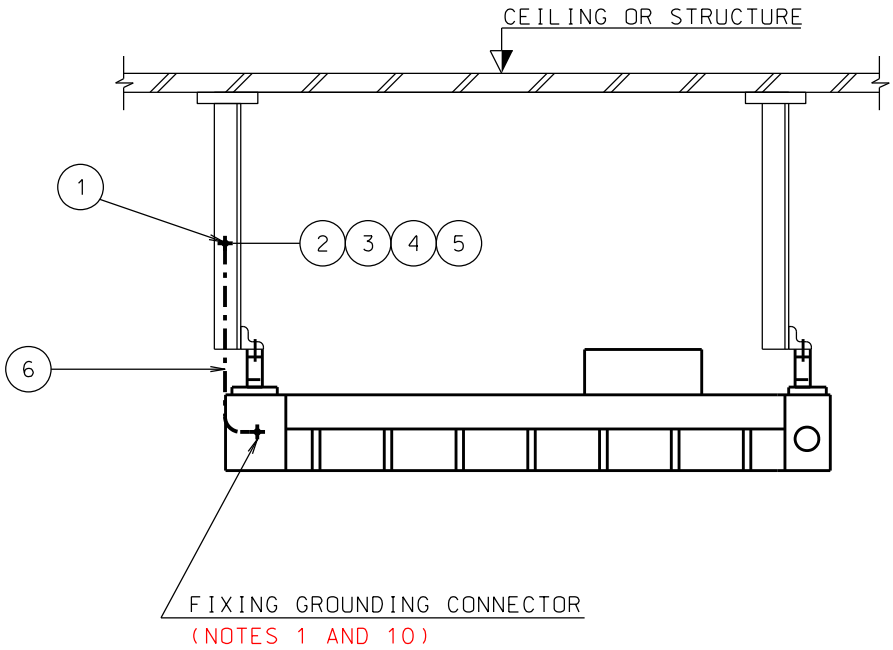


| GENERAL AREA | | SYMBOLOGY | | SYMBOLOGY | | SYMBOLOGY | |
|---|---|---|---|---|---|---|---|
| ITEM | MATERIAL DESCRIPTION | E 307/1 | QT. | | QT. | | QT. |
| 1 | TERMINAL CONNECTOR | NOTE 1 | 1 | | | | |
| 2 | HEXAGON HEAD SCREW | NOTES 4 AND 5 | 1 | | | | |
| 3 | FLAT WASHER | NOTES 4 AND 5 | 1 | | | | |
| 4 | LOCK WASHER | NOTES 4 AND 5 | 1 | | | | |
| 5 | HEXAGON NUT | NOTES 4 AND 5 | 1 | | | | |
| 6 | GROUNDING COPPER CABLE | NOTES 2 AND 8 | * | | | | |
| 7 | | | | | | | |
| 8 | | | | | | | |
| 9 | | | | | | | |
| 10 | | | | | | | |
| 11 | | | | | | | |
| 12 | | | | | | | |
| 13 | | | | | | | |
| 14 | | | | | | | |

| METALLIC LIGHTING FIXTURE GROUNDING | E 307 |
|---|---|

| PETROBRAS | DRAWING | No. I-DE-3010.00-5140-700-P4X-003 | REV. E |
|---|---|---|---|
| | AREA: | | SHEET: 11 of 33 |
| | TITLE: GROUNDING INSTALLATION TYPICAL DETAILS | | INTERNAL ESUP |

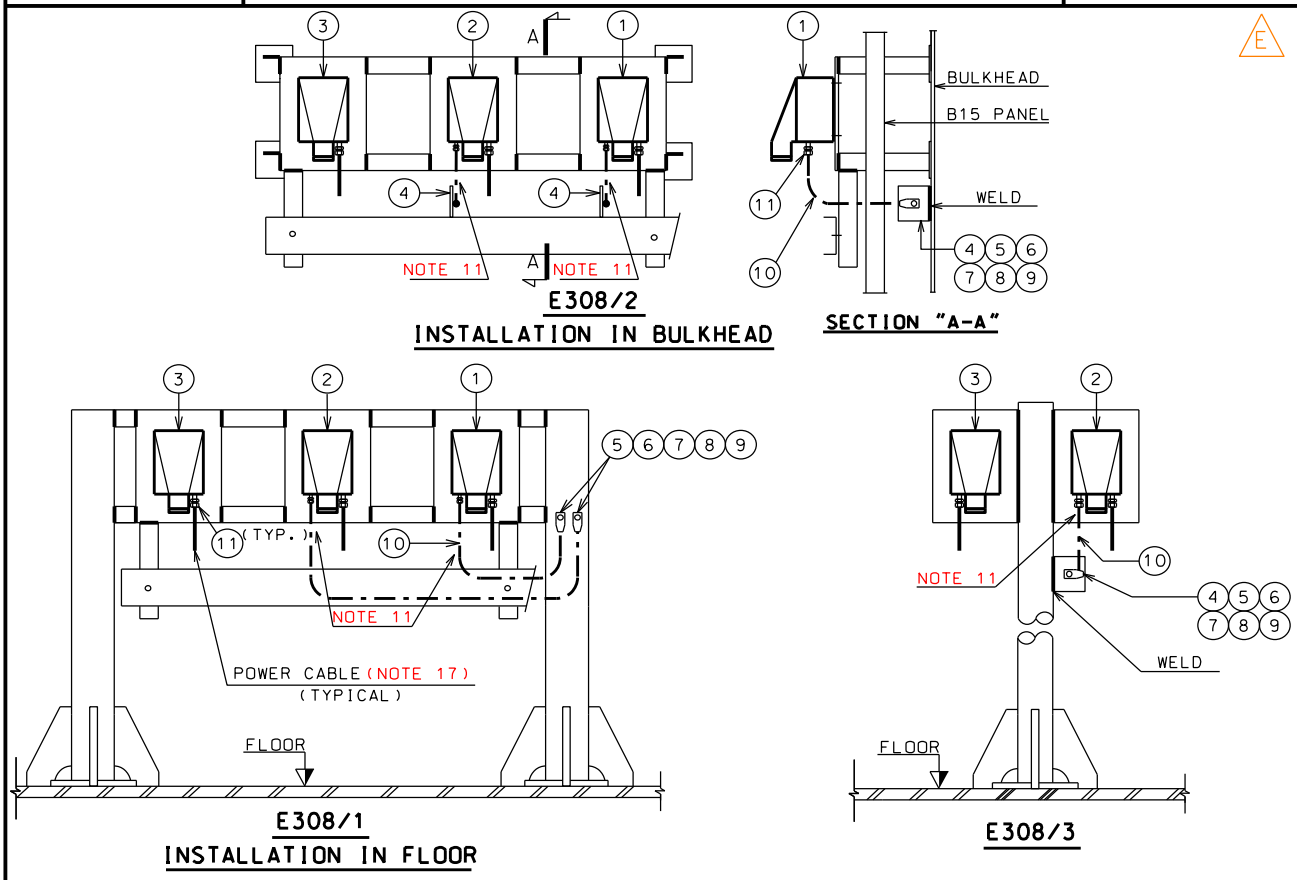


| GENERAL AREA | | SYMBOLOGY | | SYMBOLOGY | | SYMBOLOGY | |
|---|---|---|---|---|---|---|---|
| ITEM | MATERIAL DESCRIPTION | E 308/1 | QT. | E 308/2 | QT. | E 308/3 | QT. |
| 1 | SOCKET-OUTLETS 480V-3PH+T-63A | NOTE 17 | 1 | NOTE 17 | 1 | – | – |
| 2 | SOCKET-OUTLETS 250V-3PH+T-32A | NOTE 17 | 1 | NOTE 17 | 1 | NOTE 17 | 1 |
| 3 | SOCKET-OUTLETS 250V-2PH+T-16A | NOTE 17 | 1 | NOTE 17 | 1 | NOTE 17 | 1 |
| 4 | S. STEEL 316L PLATE (100x100x6,3mm) | NOTES 3 AND 19 | 1 | NOTES 3 AND 19 | 1 | NOTES 3 AND 19 | 1 |
| 5 | TERMINAL CONNECTOR | NOTE 1 | 1 | NOTE 1 | 1 | NOTE 1 | 1 |
| 6 | HEXAGON. HEAD SCREW | NOTES 4 AND 5 | 1 | NOTES 4 AND 5 | 1 | NOTES 4 AND 5 | 1 |
| 7 | FLAT WASHER | NOTES 4 AND 5 | 1 | NOTES 4 AND 5 | 1 | NOTES 4 AND 5 | 1 |
| 8 | LOCK WASHER | NOTES 4 AND 5 | 1 | NOTES 4 AND 5 | 1 | NOTES 4 AND 5 | 1 |
| 9 | HEXAGON NUT | NOTES 4 AND 5 | 1 | NOTES 4 AND 5 | 1 | NOTES 4 AND 5 | 1 |
| 10 | GROUNDING COPPER CABLE | NOTES 2 AND 8 | * | NOTE 2 | * | NOTE 2 | * |
| 11 | CABLE GLAND | NOTE 5 | * | NOTE 5 | * | NOTE 5 | * |
| 12 | | | | | | | |
| 13 | | | | | | | |
| 14 | | | | | | | |

| SOCKET-OUTLETS GROUNDING | E 308 |
|---|---|

| PETROBRAS | DRAWING | No. I-DE-3010.00-5140-700-P4X-003 | REV. E |
|---|---|---|---|
| | AREA: | SHEET: 12 of 33 | |
| | TITLE: GROUNDING INSTALLATION TYPICAL DETAILS | INTERNAL ESUP | |

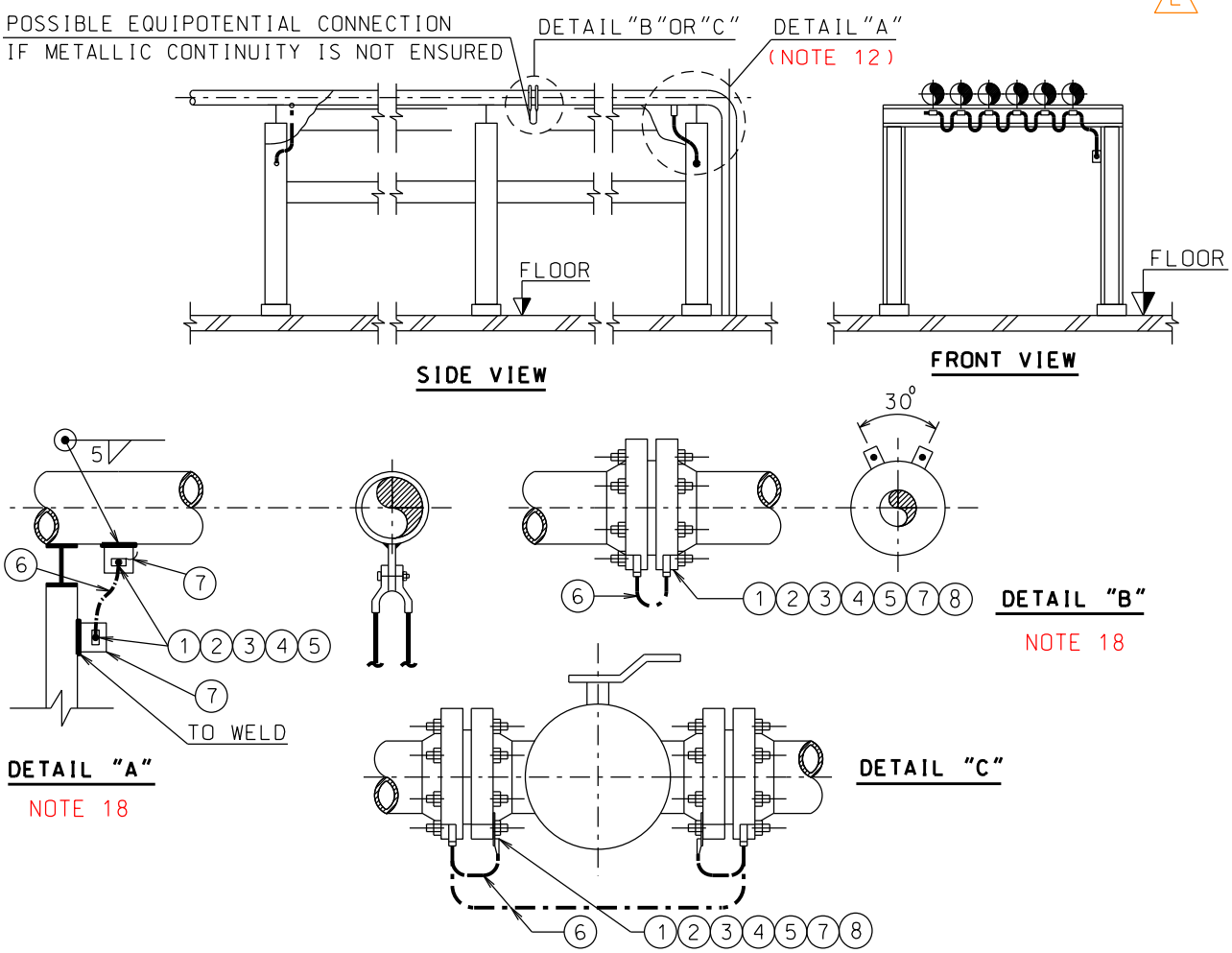


SEE CRITERIA FOR INCLUSION OF BONDING AND GROUNDING CABLES IN "TABLE OF RECOMMENDED BONDING".

| GENERAL AREA | | SYMBOLOGY | | SYMBOLOGY | | SYMBOLOGY | |
|---|---|---|---|---|---|---|---|
| ITEM | MATERIAL DESCRIPTION | E 309/1 | QT. | | QT. | | QT. |
| 1 | TERMINAL CONNECTOR | NOTE 1 | * | | | | |
| 2 | HEXAGON HEAD SCREW | NOTES 4 AND 5 | * | | | | |
| 3 | FLAT WASHER | NOTES 4 AND 5 | * | | | | |
| 4 | LOCK WASHER | NOTES 4 AND 5 | * | | | | |
| 5 | HEXAGON NUT | NOTES 4 AND 5 | * | | | | |
| 6 | GROUNDING COPPER CABLE | NOTES 2 AND 8 | * | | | | |
| 7 | STEEL PLATE (50x50x6,3mm) | NOTE 3 | * | | | | |
| 8 | | | | | | | |
| 9 | | | | | | | |
| 10 | | | | | | | |
| 11 | | | | | | | |
| 12 | | | | | | | |
| 13 | | | | | | | |
| 14 | | | | | | | |

| METALLIC PIPE AND FLANGE GROUNDING | E 309 |
|---|---|

| PETROBRAS | DRAWING | No. I-DE-3010.00-5140-700-P4X-003 | REV. E |
|---|---|---|---|
| | AREA: | | SHEET: 13 of 33 |
| | TITLE: GROUNDING INSTALLATION TYPICAL DETAILS | | INTERNAL ESUP |

E

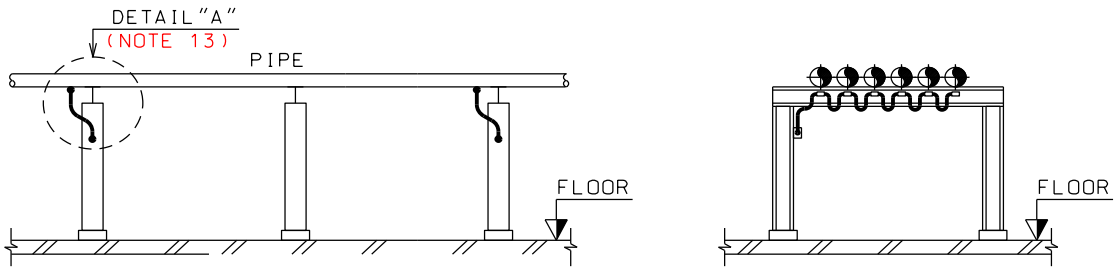


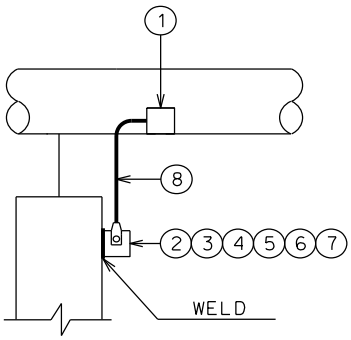


**DETAIL "A"**

NOTE 13

| GENERAL AREA | | SYMBOLOGY | | SYMBOLOGY | | SYMBOLOGY | |
|---|---|---|---|---|---|---|---|
| ITEM | MATERIAL DESCRIPTION | E 310/1 | QT. | | QT. | | QT. |
| 1 | GROUNDING SADDLES | | * | | | | |
| 2 | STEEL PLATE (100x100x6,3mm) | NOTE 3 | 1 | | | | |
| 3 | TERMINAL CONNECTOR | NOTE 1 | 1 | | | | |
| 4 | HEXAGON HEAD SCREW | NOTES 4 AND 5 | 1 | | | | |
| 5 | FLAT WASHER | NOTES 4 AND 5 | 1 | | | | |
| 6 | LOCK WASHER | NOTES 4 AND 5 | 1 | | | | |
| 7 | HEXAGON NUT | NOTES 4 AND 5 | 1 | | | | |
| 8 | GROUNDING COPPER CABLE | NOTES 2 AND 8 | * | | | | |
| 9 | | | | | | | |
| 10 | | | | | | | |
| 11 | | | | | | | |
| 12 | | | | | | | |
| 13 | | | | | | | |
| 14 | | | | | | | |

| NON-METALLIC PIPE GROUNDING | E 310 |
|---|---|

| PETROBRAS | DRAWING | No. I-DE-3010.00-5140-700-P4X-003 | REV. E |
|---|---|---|---|
| | AREA: | SHEET: 14 of 33 | |
| | TITLE: GROUNDING INSTALLATION TYPICAL DETAILS | INTERNAL | |
| | | ESUP | |

E

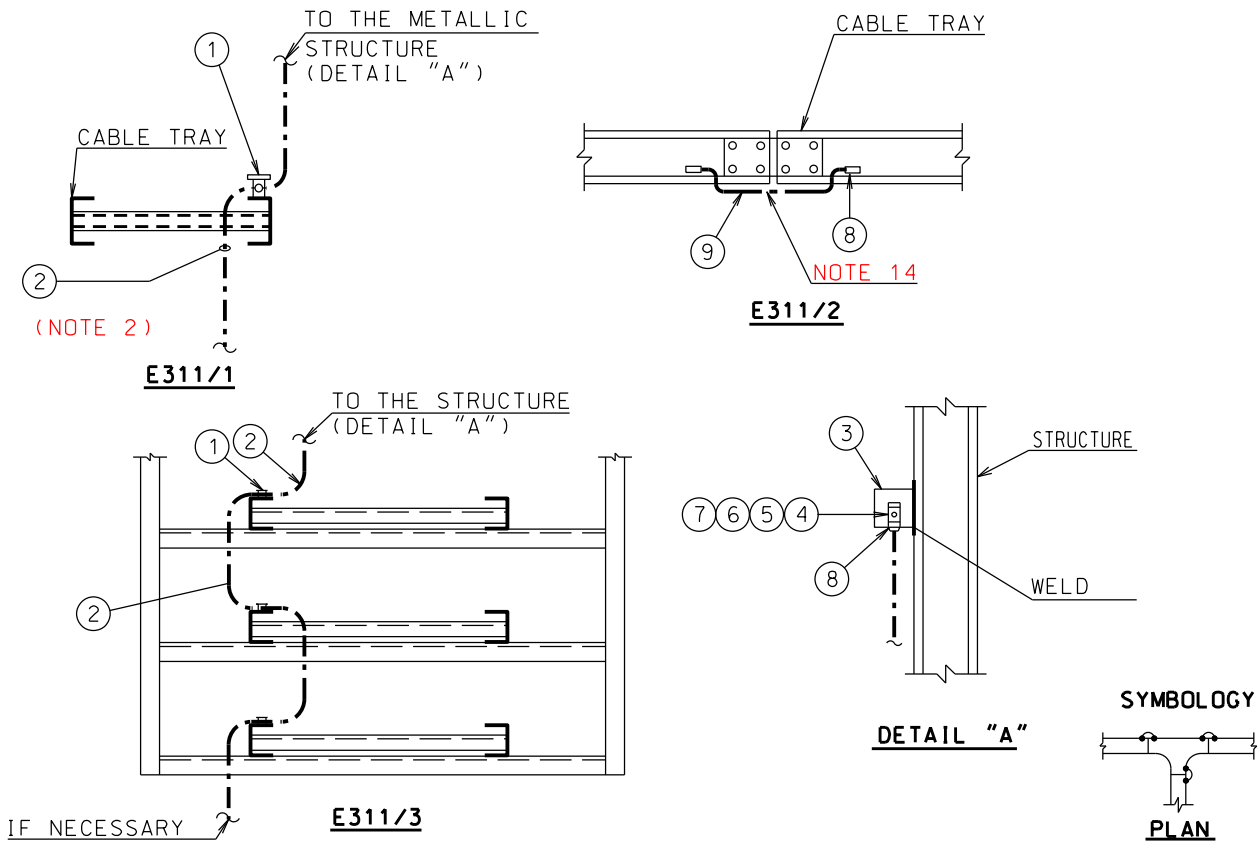


NOTE 20

| GENERAL AREA | | SYMBOLOGY | | SYMBOLOGY | | SYMBOLOGY | |
|---|---|---|---|---|---|---|---|
| ITEM | MATERIAL DESCRIPTION | E 311/1 | QT. | E 311/2 | QT. | E 311/3 | QT. |
| 1 | GROUNDING CONNECTOR | NOTE 1 | 1 | NOTE 1 | 2 | NOTE 1 | 3 |
| 2 | GROUNDING COPPER CABLE | NOTES 2 AND 8 | * | NOTE 2 | * | NOTE 2 | * |
| 3 | STEEL PLATE (50x50x6,3mm) | NOTE 3 | 1 | NOTE 3 | 1 | NOTE 3 | – |
| 4 | HEXAGON HEAD SCREW | NOTES 4 AND 5 | 1 | NOTES 4 AND 5 | 1 | NOTES 4 AND 5 | – |
| 5 | FLAT WASHER | NOTES 4 AND 5 | 1 | NOTES 4 AND 5 | 1 | NOTES 4 AND 5 | – |
| 6 | LOCK WASHER | NOTES 4 AND 5 | 1 | NOTES 4 AND 5 | 1 | NOTES 4 AND 5 | – |
| 7 | HEXAGON NUT | NOTES 4 AND 5 | 1 | NOTES 4 AND 5 | 1 | NOTES 4 AND 5 | – |
| 8 | TERMINAL CONNECTOR | NOTE 1 | * | NOTE 1 | 2 | NOTE 1 | * |
| 9 | BONDING | | | NOTE 14 | 1 | | |
| 10 | | | | | | | |
| 11 | | | | | | | |
| 12 | | | | | | | |
| 13 | | | | | | | |
| 14 | | | | | | | |

| METALLIC CABLE TRAY GROUNDING | E 311 |
|---|---|

| PETROBRAS | DRAWING | No. I-DE-3010.00-5140-700-P4X-003 | REV. E |
|---|---|---|---|
| | AREA: | SHEET: 15 of 33 | |
| | TITLE: GROUNDING INSTALLATION TYPICAL DETAILS | INTERNAL | |
| | | ESUP | |

E

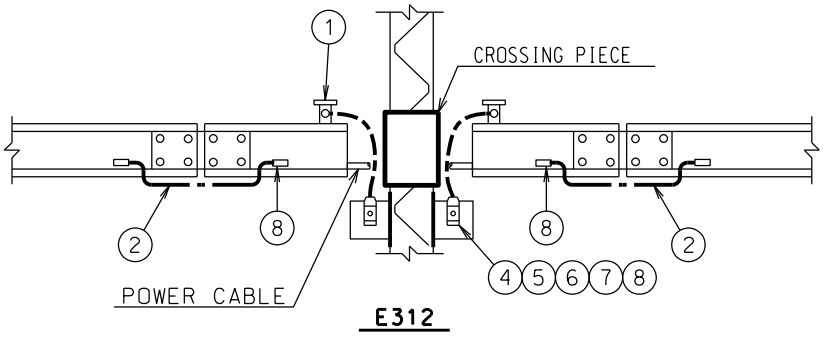


NOTE 20

| GENERAL AREA | | SYMBOLOGY | | SYMBOLOGY | | SYMBOLOGY | |
|---|---|---|---|---|---|---|---|
| ITEM | MATERIAL DESCRIPTION | E 312 | QT. | | QT. | | QT. |
| 1 | GROUNDING CONNECTOR | NOTE 1 | 1 | | | | |
| 2 | GROUNDING COPPER CABLE | NOTES 2 AND 8 | * | | | | |
| 3 | S. STEEL 316L PLATE (50x50x6,3mm) | NOTES 3 AND 19 | 2 | | | | |
| 4 | HEXAGON HEAD SCREW | NOTES 4 AND 5 | 2 | | | | |
| 5 | FLAT WASHER | NOTES 4 AND 5 | 2 | | | | |
| 6 | LOCK WASHER | NOTES 4 AND 5 | 2 | | | | |
| 7 | HEXAGON NUT | NOTES 4 AND 5 | 2 | | | | |
| 8 | TERMINAL CONNECTOR | NOTE 1 | * | | | | |
| 9 | | | | | | | |
| 10 | | | | | | | |
| 11 | | | | | | | |
| 12 | | | | | | | |
| 13 | | | | | | | |
| 14 | | | | | | | |

| CABLE TRAY IN ENVIRONMENT TRANSITION | E 312 |
|---|---|

| PETROBRAS | DRAWING | No. I-DE-3010.00-5140-700-P4X-003 | REV. E |
|---|---|---|---|
| | AREA: | SHEET: 16 of 33 | |
| | TITLE: GROUNDING INSTALLATION TYPICAL DETAILS | INTERNAL | |
| | | ESUP | |

E

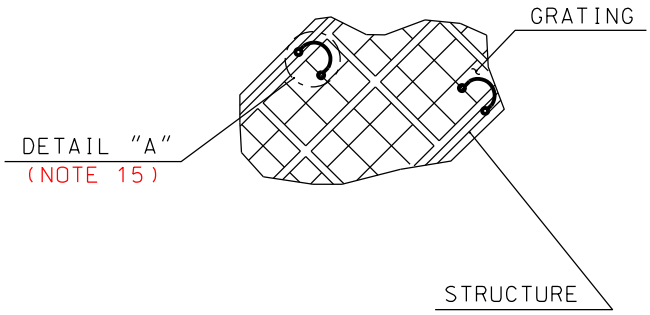


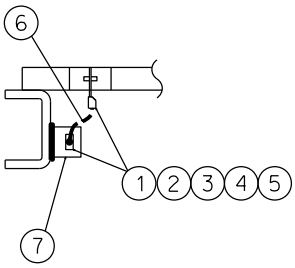


**DETAIL "A"**
(NOTE 2)

NOTE 20

| GENERAL AREA | | SYMBOLOGY | | SYMBOLOGY | | SYMBOLOGY | |
|---|---|---|---|---|---|---|---|
| ITEM | MATERIAL DESCRIPTION | E 313/1 | QT. | | QT. | | QT. |
| 1 | TERMINAL CONNECTOR | NOTE 1 | 1 | | | | |
| 2 | HEXAGON HEAD SCREW | NOTES 4 AND 5 | 1 | | | | |
| 3 | FLAT WASHER | NOTES 4 AND 5 | 1 | | | | |
| 4 | LOCK WASHER | NOTES 4 AND 5 | 1 | | | | |
| 5 | HEXAGON NUT | NOTES 4 AND 5 | 1 | | | | |
| 6 | GROUNDING COPPER CABLE | NOTES 2 AND 8 | * | | | | |
| 7 | STEEL PLATE (100x100x6,3mm) | NOTE 3 | 2 | | | | |
| 8 | | | | | | | |
| 9 | | | | | | | |
| 10 | | | | | | | |
| 11 | | | | | | | |
| 12 | | | | | | | |
| 13 | | | | | | | |
| 14 | | | | | | | |

| METALLIC GRATING GROUNDING | E 313 |
|---|---|

| PETROBRAS | DRAWING | No. I-DE-3010.00-5140-700-P4X-003 | REV. E |
|---|---|---|---|
| | AREA: | SHEET: 17 of 33 | |
| | TITLE: GROUNDING INSTALLATION TYPICAL DETAILS | INTERNAL | |
| | | ESUP | |

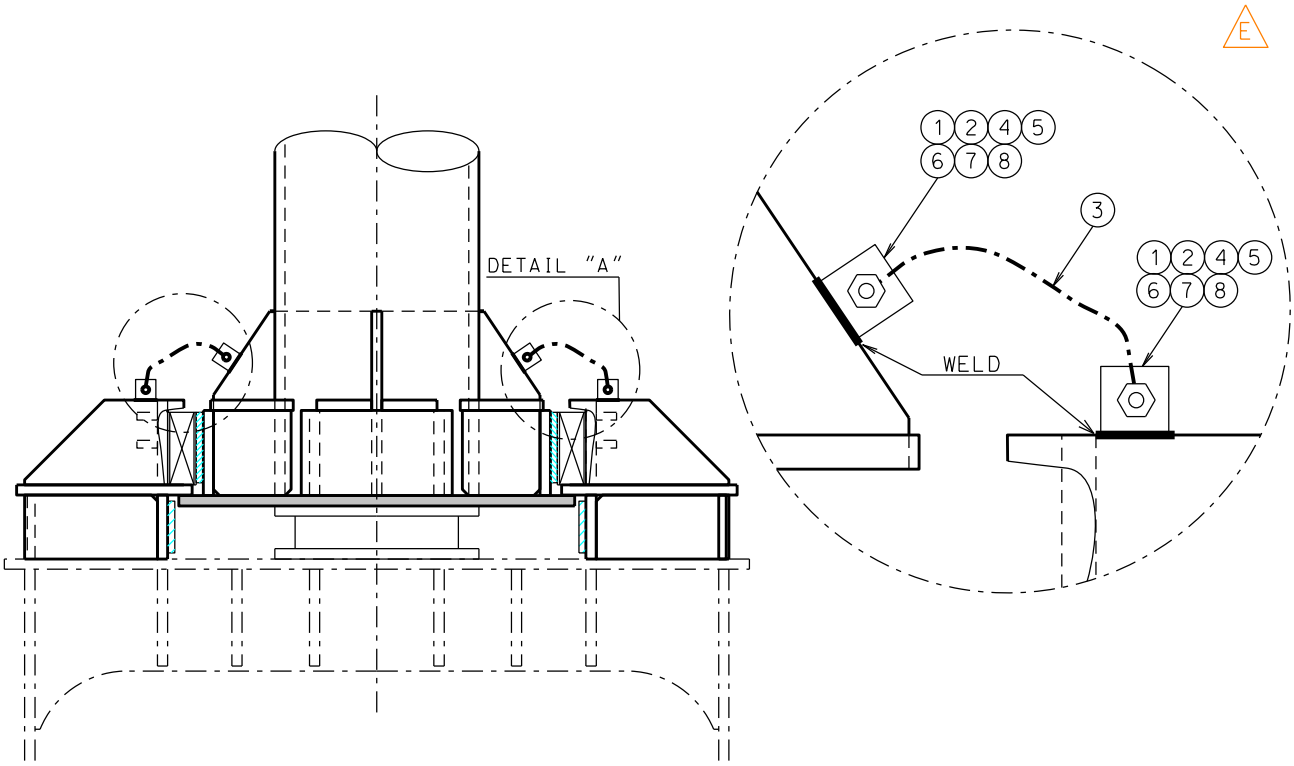


| GENERAL AREA | | SYMBOLOGY | | SYMBOLOGY | | SYMBOLOGY | |
|---|---|---|---|---|---|---|---|
| ITEM | MATERIAL DESCRIPTION | E 314 | QT. | | QT. | | QT. |
| 1 | GROUNDING CONNECTOR | NOTE 1 | 4 | | | | |
| 2 | STEEL PLATE 50x50x6.3mm | NOTE 3 | 4 | | | | |
| 3 | GROUNDING COPPER CABLE | NOTES 2, 8 AND 16 | * | | | | |
| 4 | TERMINAL CONNECTOR | NOTE 1 | 4 | | | | |
| 5 | HEXAGON HEAD SCREW | NOTES 4 AND 5 | 4 | | | | |
| 6 | FLAT WASHER | NOTES 4 AND 5 | 4 | | | | |
| 7 | LOCK WASHER | NOTES 4 AND 5 | 4 | | | | |
| 8 | HEXAGON NUT | NOTES 4 AND 5 | 4 | | | | |
| 9 | | | | | | | |
| 10 | | | | | | | |
| 11 | | | | | | | |
| 12 | | | | | | | |
| 13 | | | | | | | |
| 14 | | | | | | | |

| MODULE COLUMN BASE (STOOL) GROUNDING | E 314 |
|---|---|

| PETROBRAS | DRAWING | No. I-DE-3010.00-5140-700-P4X-003 | REV. E |
|---|---|---|---|
| | AREA: | SHEET: 18 of 33 | |
| | TITLE: GROUNDING INSTALLATION TYPICAL DETAILS | INTERNAL | |
| | | ESUP | |

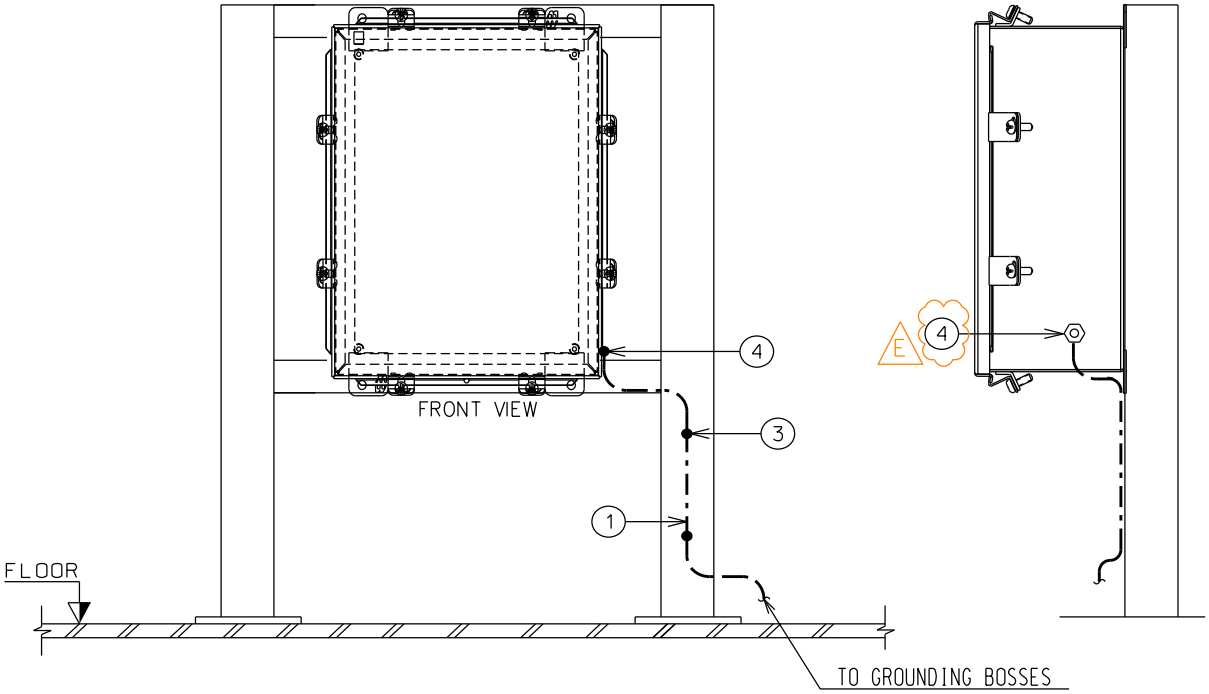


NOTE 26

| GENERAL AREA | | SYMBOLOGY | | SYMBOLOGY | | SYMBOLOGY | |
|---|---|---|---|---|---|---|---|
| ITEM | MATERIAL DESCRIPTION | E 315/1 | QT. | | QT. | | QT. |
| 1 | GROUNDING COPPER CABLE | NOTES 2 AND 8 | * | | | | |
| 2 | | | | | | | |
| 3 | TERMINAL CONNECTOR | NOTE 1 | 2 | | | | |
| 4 | TERMINAL CONNECTOR | NOTE 1 | 1 | | | | |
| 5 | | | | | | | |
| 6 | | | | | | | |
| 7 | | | | | | | |
| 8 | | | | | | | |
| 9 | | | | | | | |
| 10 | | | | | | | |
| 11 | | | | | | | |
| 12 | | | | | | | |
| 13 | | | | | | | |
| 14 | | | | | | | |

| JUNCTION BOX GROUNDING | E 315 |
|---|---|

| PETROBRAS | DRAWING | No. I-DE-3010.00-5140-700-P4X-003 | REV. E |
|---|---|---|---|
| | AREA: | SHEET: 19 of 33 | |
| | TITLE: GROUNDING INSTALLATION TYPICAL DETAILS | INTERNAL | |
| | | ESUP | |

E

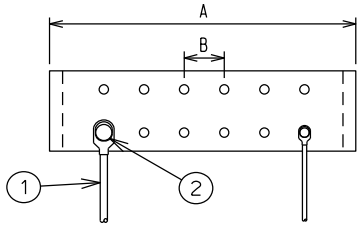


FRONT VIEW

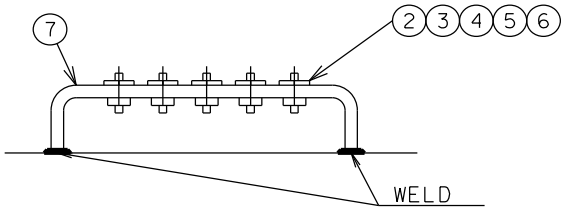


LATERAL VIEW

E316/1

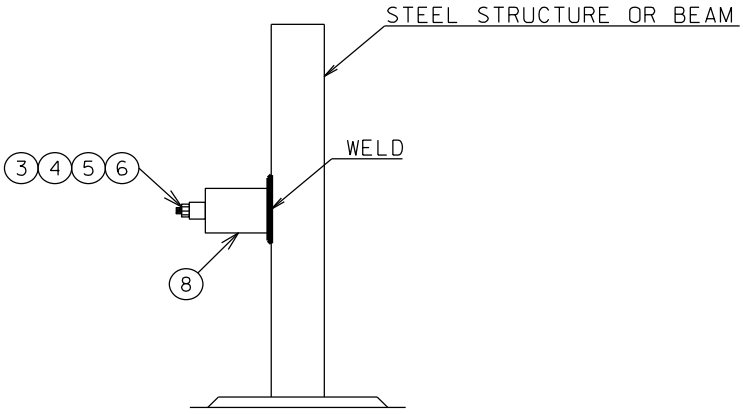


E316/2

| ITEM | MATERIAL DESCRIPTION | SYMBOLOGY E 316/1 | QT. | SYMBOLOGY E 316/2 | QT. | SYMBOLOGY | QT. |
|---|---|---|---|---|---|---|---|
| 1 | GROUNDING COPPER CABLE | NOTES 2 AND 8 | * | | | | |
| 2 | TERMINAL CONNECTOR EYE TYPE | NOTE 1 | * | | | | |
| 3 | HEXAGON HEAD SCREW | NOTES 4 AND 5 | * | | | | |
| 4 | FLAT WASHER | NOTES 4 AND 5 | * | | | | |
| 5 | LOCK WASHER | NOTES 4 AND 5 | * | | | | |
| 6 | HEXAGON NUT | NOTES 4 AND 5 | * | | | | |
| 7 | GROUNDING BAR | NOTES 5 AND 19 | 1 | | | | |
| 8 | GROUNDING BOSS | | | NOTE 9 | * | | |
| 9 | | | | | | | |
| 10 | | | | | | | |
| 11 | | | | | | | |
| 12 | | | | | | | |
| 13 | | | | | | | |
| 14 | | | | | | | |

| MODULE GROUNDING BAR AND GROUNDING BOSS | E 316 |
|---|---|

| PETROBRAS | DRAWING | No. I-DE-3010.00-5140-700-P4X-003 | REV. E |
|---|---|---|---|
| | AREA: | SHEET: 20 of 33 | |
| | TITLE: GROUNDING INSTALLATION TYPICAL DETAILS | INTERNAL | |
| | | ESUP | |

E

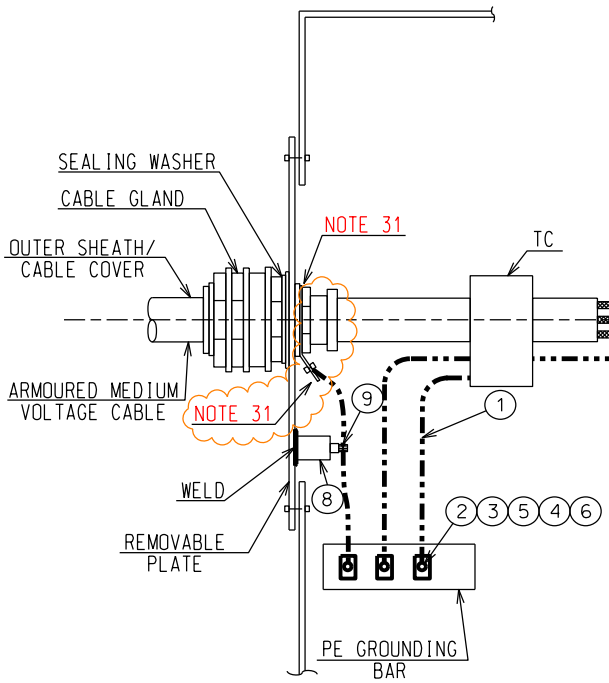


E317/1

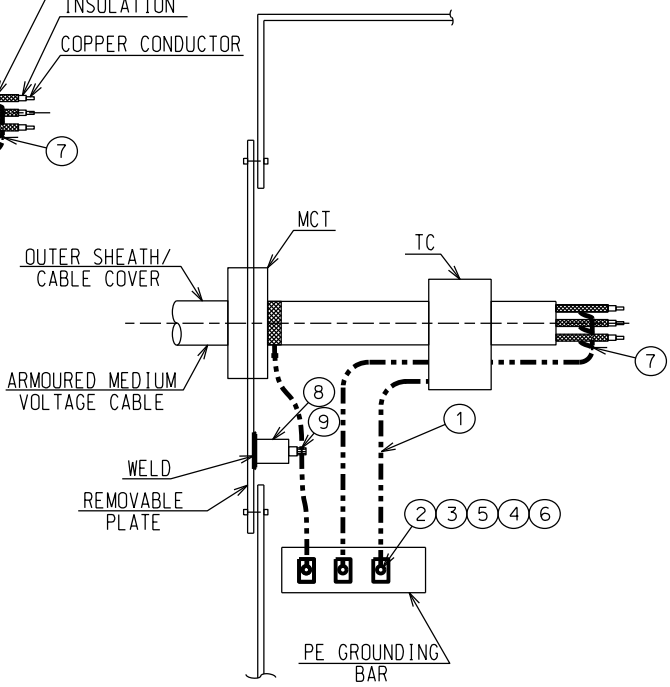


E317/2

NOTE 30 NOTE 35 E

| ITEM | MATERIAL DESCRIPTION | SYMBOLOGY E 317/1 | QT. | SYMBOLOGY E 317/2 | QT. | SYMBOLOGY | QT. |
|---|---|---|---|---|---|---|---|
| 1 | GROUNDING COPPER CABLE | NOTES 2 AND 8 | * | NOTES 2 AND 8 | * | | |
| 2 | TERMINAL CONNECTOR | NOTES 1 AND 2 | 3 | NOTES 1 AND 2 | 3 | | |
| 3 | HEXAGON HEAD SCREW | NOTES 4 AND 5 | 3 | NOTES 4 AND 5 | 3 | | |
| 4 | FLAT WASHER | NOTES 4 AND 5 | 3 | NOTES 4 AND 5 | 3 | | |
| 5 | LOCK WASHER | NOTES 4 AND 5 | 3 | NOTES 4 AND 5 | 3 | | |
| 6 | HEXAGON NUT | NOTES 4 AND 5 | 3 | NOTES 4 AND 5 | 3 | | |
| 7 | TERMINAL CONNECTOR (KS) | NOTES 1 AND 2 | 3 | NOTES 1 AND 2 | 3 | | |
| 8 | EARTH BOSS BY MAKER | NOTES 1, 2 AND 23 | – | NOTES 1, 2 AND 23 | – | | |
| 9 | TERMINAL CONNECTOR | NOTES 1 AND 2 | 2 | | | | |
| 10 | | | | | | | |
| 11 | | | | | | | |
| 12 | | | | | | | |
| 13 | | | | | | | |
| 14 | | | | | | | |

MEDIUM-VOLTAGE MULTI-CORE ARMOURED GROUNDING

E 317

| PETROBRAS | DRAWING | No. I-DE-3010.00-5140-700-P4X-003 | REV. E |
|---|---|---|---|
| | AREA: | SHEET: 21 of 33 | |
| | TITLE: GROUNDING INSTALLATION TYPICAL DETAILS | INTERNAL | |
| | | ESUP | |

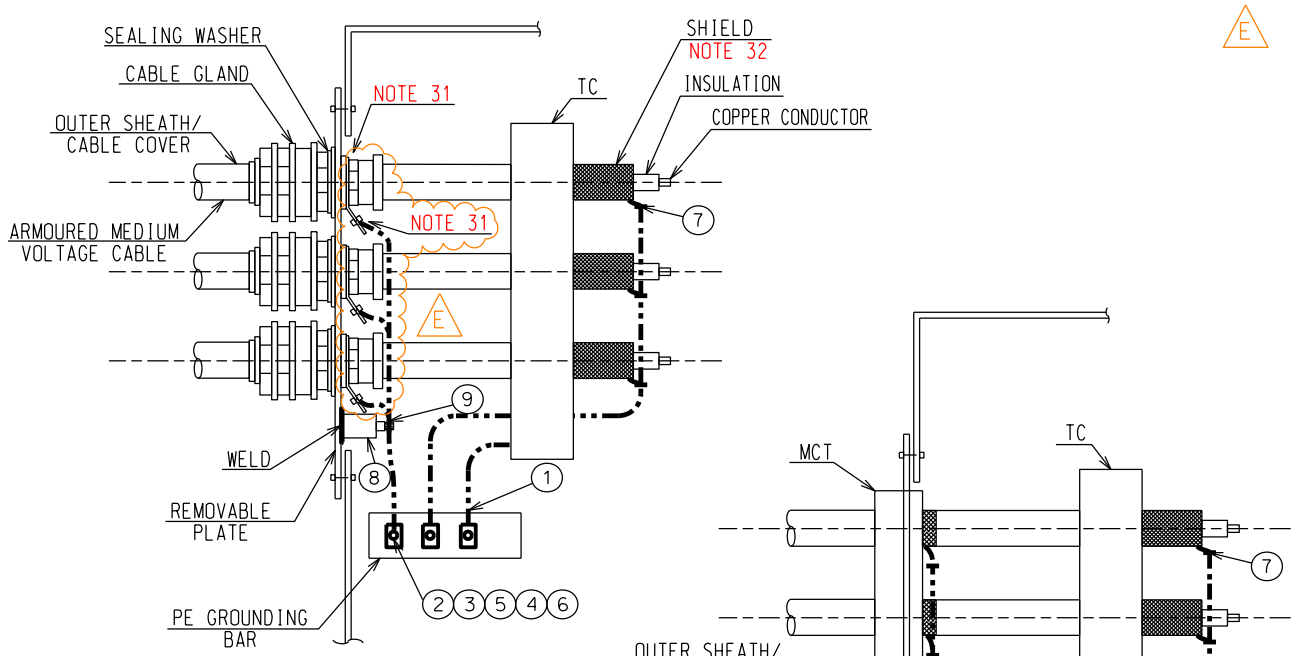


E318/1

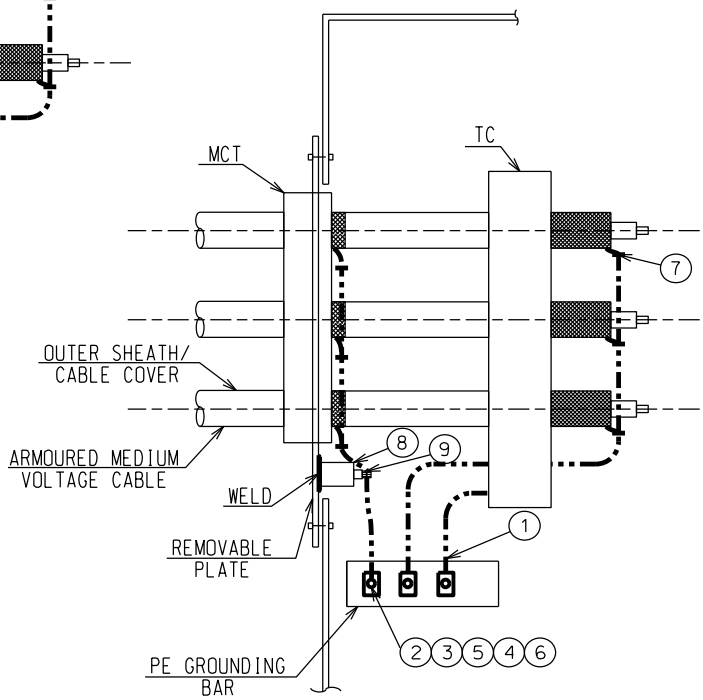


E318/2

NOTE 30 NOTE 35 E

| ITEM | MATERIAL DESCRIPTION | SYMBOLOGY E 318/1 | QT. | SYMBOLOGY E 318/2 | QT. | SYMBOLOGY | QT. |
|---|---|---|---|---|---|---|---|
| 1 | GROUNDING COPPER CABLE | NOTES 2 AND 8 | * | NOTES 2 AND 8 | * | | |
| 2 | TERMINAL CONNECTOR | NOTES 1 AND 2 | 3 | NOTES 1 AND 2 | 3 | | |
| 3 | HEXAGON HEAD SCREW | NOTES 4 AND 5 | 3 | NOTES 4 AND 5 | 3 | | |
| 4 | FLAT WASHER | NOTES 4 AND 5 | 3 | NOTES 4 AND 5 | 3 | | |
| 5 | LOCK WASHER | NOTES 4 AND 5 | 3 | NOTES 4 AND 5 | 3 | | |
| 6 | HEXAGON NUT | NOTES 4 AND 5 | 3 | NOTES 4 AND 5 | 3 | | |
| 7 | TERMINAL CONNECTOR (KS) | NOTES 1 AND 2 | 3 | NOTES 1 AND 2 | 3 | | |
| 8 | EARTH BOSS BY MAKER | NOTES 1, 2 AND 23 | – | NOTES 1, 2 AND 23 | – | | |
| 9 | TERMINAL CONNECTOR | NOTES 1 AND 2 | 2 | | | | |
| 10 | | | | | | | |
| 11 | | | | | | | |
| 12 | | | | | | | |
| 13 | | | | | | | |
| 14 | | | | | | | |

MEDIUM-VOLTAGE SINGLE-CORE ARMOURED CABLE GROUNDING | E 318

| PETROBRAS | DRAWING | No. I-DE-3010.00-5140-700-P4X-003 | REV. E |
|---|---|---|---|
| | AREA: | SHEET: 22 of 33 | |
| | TITLE: GROUNDING INSTALLATION TYPICAL DETAILS | INTERNAL | |
| | | ESUP | |

E

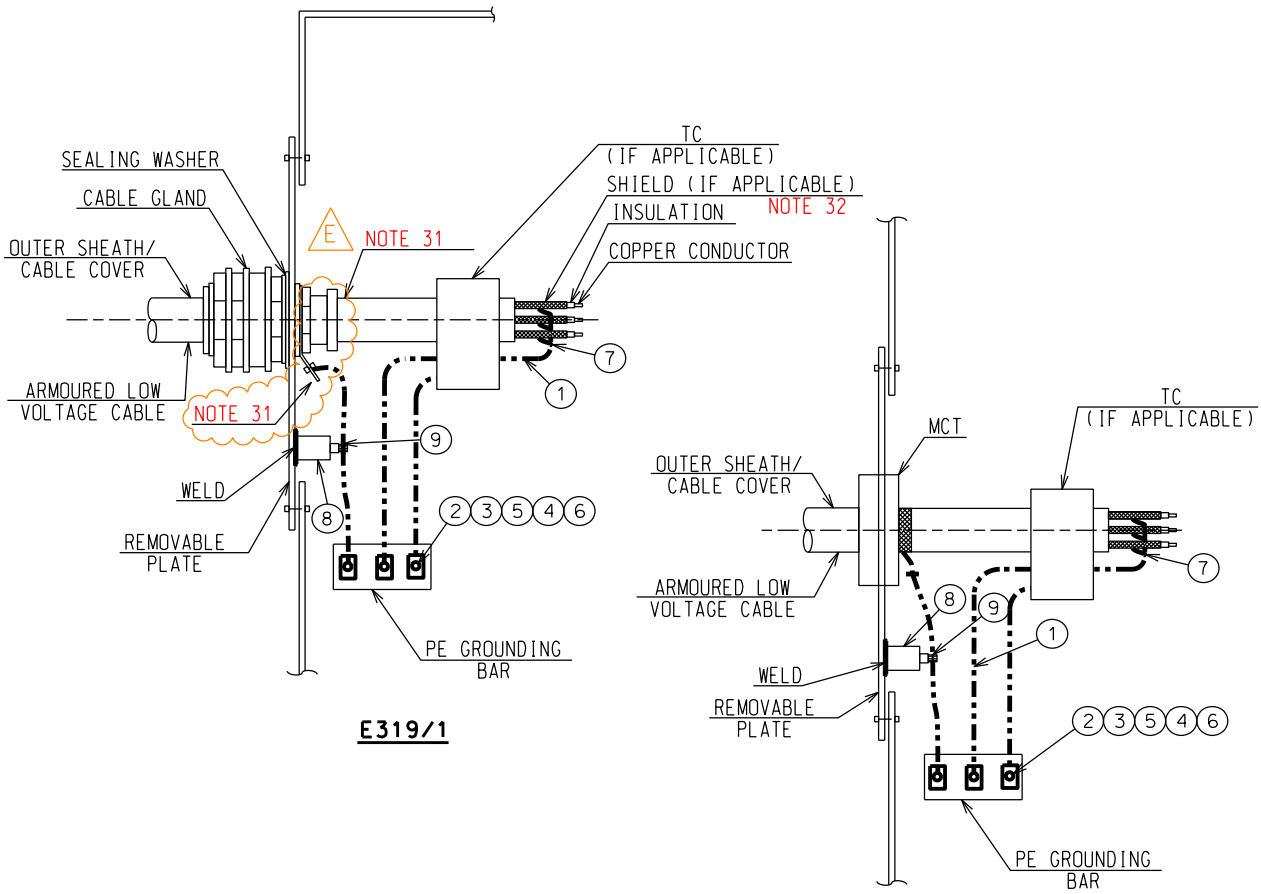


NOTE 30 NOTE 35 E

| ITEM | MATERIAL DESCRIPTION | SYMBOLOGY E 319/1 | QT. | SYMBOLOGY E 319/2 | QT. | SYMBOLOGY | QT. |
|---|---|---|---|---|---|---|---|
| 1 | GROUNDING COPPER CABLE | NOTES 2 AND 8 | * | NOTES 2 AND 8 | * | | |
| 2 | TERMINAL CONNECTOR | NOTES 1 AND 2 | 2 | NOTES 1 AND 2 | 2 | | |
| 3 | HEXAGON HEAD SCREW | NOTES 4 AND 5 | 2 | NOTES 4 AND 5 | 2 | | |
| 4 | FLAT WASHER | NOTES 4 AND 5 | 2 | NOTES 4 AND 5 | 2 | | |
| 5 | LOCK WASHER | NOTES 4 AND 5 | 2 | NOTES 4 AND 5 | 2 | | |
| 6 | HEXAGON NUT | NOTES 4 AND 5 | 2 | NOTES 4 AND 5 | 2 | | |
| 7 | TERMINAL CONNECTOR (KS) | NOTES 1 AND 2 | 2 | NOTES 1 AND 2 | 2 | | |
| 8 | EARTH BOSS BY MAKER | NOTES 1, 2 AND 23 | – | NOTES 1, 2 AND 23 | – | | |
| 9 | TERMINAL CONNECTOR | NOTES 1 AND 2 | 2 | | | | |
| 10 | | | | | | | |
| 11 | | | | | | | |
| 12 | | | | | | | |
| 13 | | | | | | | |
| 14 | | | | | | | |

# LOW-VOLTAGE MULTI-CORE ARMOURED CABLE GROUNDING

E 319

| PETROBRAS | DRAWING | No. I-DE-3010.00-5140-700-P4X-003 | REV. E |
|---|---|---|---|
| | AREA: | SHEET: 23 of 33 | |
| | TITLE: GROUNDING INSTALLATION TYPICAL DETAILS | INTERNAL | |
| | | ESUP | |

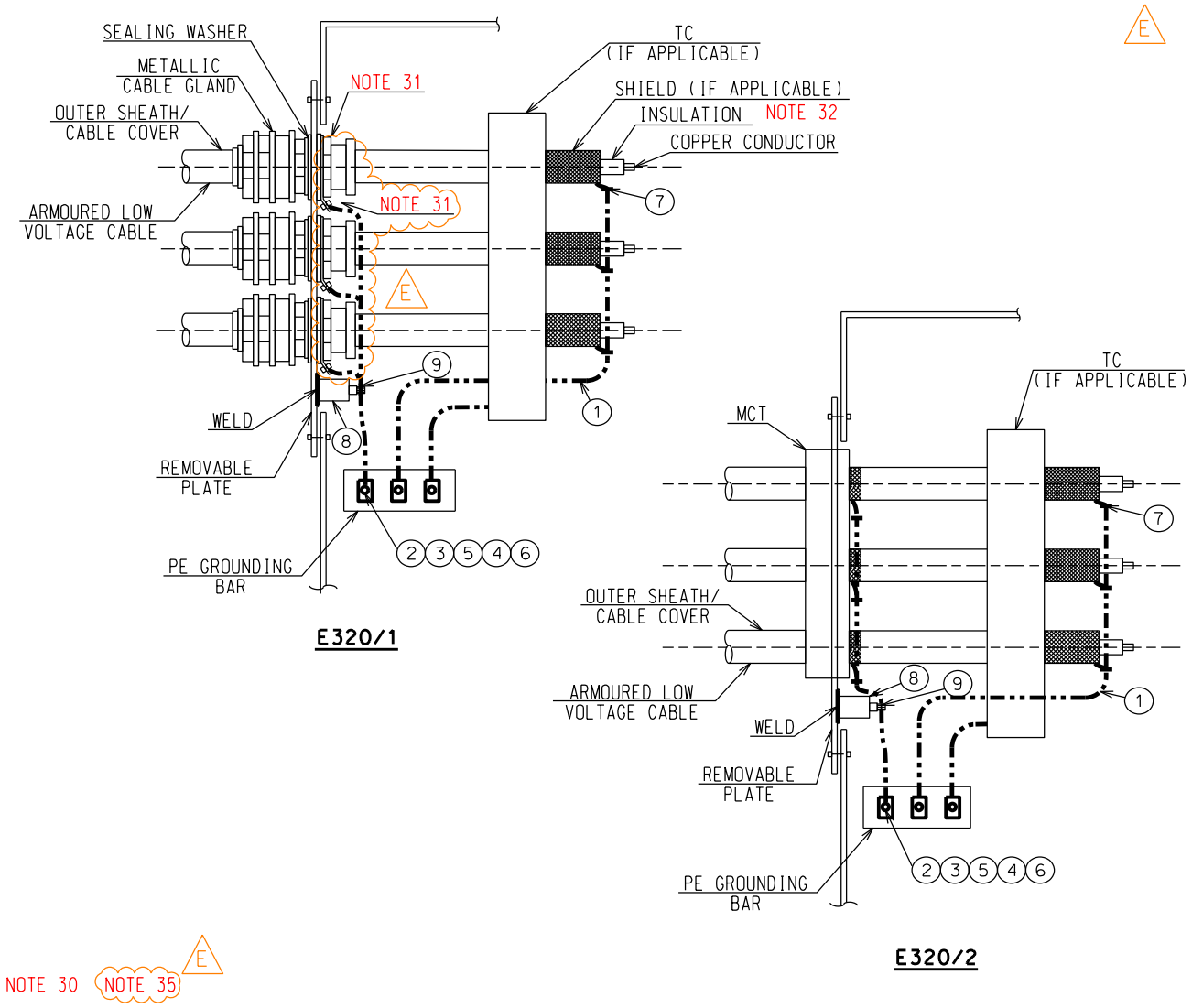


| ITEM | MATERIAL DESCRIPTION | SYMBOLOGY E 320/1 | QT. | SYMBOLOGY E 320/2 | QT. | SYMBOLOGY | QT. |
|---|---|---|---|---|---|---|---|
| 1 | GROUNDING COPPER CABLE | NOTES 2 AND 8 | * | NOTES 2 AND 8 | * | | |
| 2 | TERMINAL CONNECTOR | NOTES 1 AND 2 | 2 | NOTES 1 AND 2 | 2 | | |
| 3 | HEXAGON HEAD SCREW | NOTES 4 AND 5 | 2 | NOTES 4 AND 5 | 2 | | |
| 4 | FLAT WASHER | NOTES 4 AND 5 | 2 | NOTES 4 AND 5 | 2 | | |
| 5 | LOCK WASHER | NOTES 4 AND 5 | 2 | NOTES 4 AND 5 | 2 | | |
| 6 | HEXAGON NUT | NOTES 4 AND 5 | 2 | NOTES 4 AND 5 | 2 | | |
| 7 | TERMINAL CONNECTOR (KS) | NOTES 1 AND 2 | 2 | NOTES 1 AND 2 | 2 | | |
| 8 | EARTH BOSS BY MAKER | NOTES 1, 2 AND 23 | – | NOTES 1, 2 AND 23 | – | | |
| 9 | TERMINAL CONNECTOR | NOTES 1 AND 2 | 2 | | | | |
| 10 | | | | | | | |
| 11 | | | | | | | |
| 12 | | | | | | | |
| 13 | | | | | | | |
| 14 | | | | | | | |

# LOW-VOLTAGE SINGLE-CORE ARMOURED CABLE GROUNDING

E 320

| PETROBRAS | DRAWING | No. I-DE-3010.00-5140-700-P4X-003 | REV. E |
|---|---|---|---|
| | AREA: | SHEET: 24 of 33 | |
| | TITLE: GROUNDING INSTALLATION TYPICAL DETAILS | INTERNAL | |
| | | ESUP | |

E

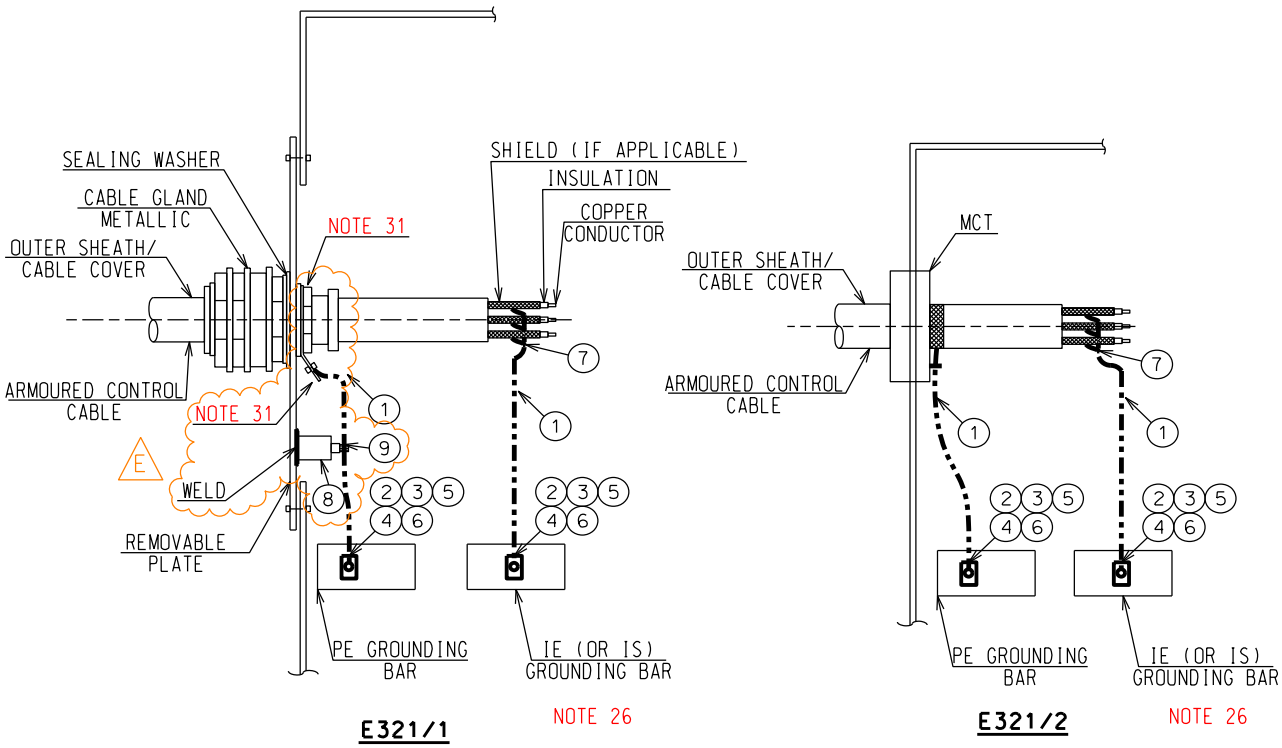


NOTE 30

| ITEM | MATERIAL DESCRIPTION | SYMBOLOGY E 321/1 | QT. | SYMBOLOGY E 321/2 | QT. | SYMBOLOGY | QT. |
|---|---|---|---|---|---|---|---|
| 1 | GROUNDING COPPER CABLE | NOTES 2 AND 8 | * | NOTES 2 AND 8 | * | | |
| 2 | TERMINAL CONNECTOR | NOTES 1 AND 2 | 3 | NOTES 1 AND 2 | 3 | | |
| 3 | HEXAGON HEAD SCREW | NOTES 4 AND 5 | 3 | NOTES 4 AND 5 | 3 | | |
| 4 | FLAT WASHER | NOTES 4 AND 5 | 3 | NOTES 4 AND 5 | 3 | | |
| 5 | LOCK WASHER | NOTES 4 AND 5 | 3 | NOTES 4 AND 5 | 3 | | |
| 6 | HEXAGON NUT | NOTES 4 AND 5 | 3 | NOTES 4 AND 5 | 3 | | |
| 7 | TERMINAL CONNECTOR (KS) | NOTES 1 AND 2 | * | NOTES 1 AND 2 | * | | |
| 8 | EARTH BOSS BY MAKER | NOTES 1, 2 AND 23 | – | NOTES 1, 2 AND 23 | – | | |
| 9 | TERMINAL CONNECTOR | NOTES 1 AND 2 | 2 | | | | |
| 10 | | | | | | | |
| 11 | | | | | | | |
| 12 | | | | | | | |
| 13 | | | | | | | |
| 14 | | | | | | | |

E

| CONTROL MULTI-CORE ARMOURED CABLE GROUNDING | E 321 |
|---|---|

| PETROBRAS | DRAWING | No. I-DE-3010.00-5140-700-P4X-003 | REV. E |
|---|---|---|---|
| | AREA: | SHEET: 25 of 33 | |
| | TITLE: GROUNDING INSTALLATION TYPICAL DETAILS | INTERNAL | |
| | | ESUP | |

E

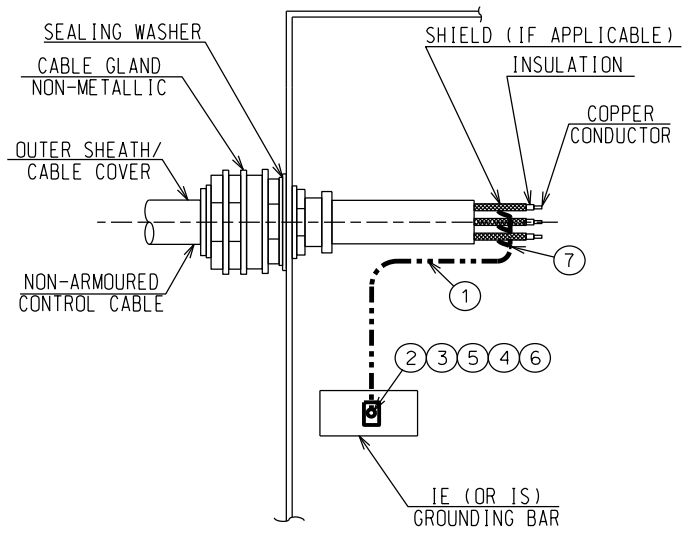


E322/1

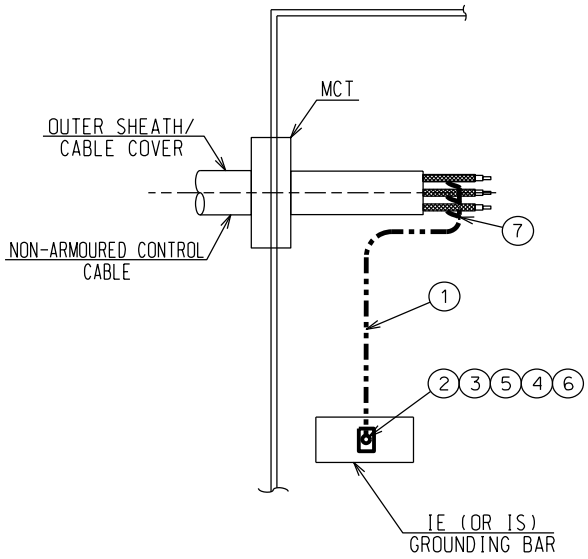


E322/2

E

| ITEM | MATERIAL DESCRIPTION | SYMBOLOGY E 322/1 | QT. | SYMBOLOGY E 322/2 | QT. | SYMBOLOGY | QT. |
|---|---|---|---|---|---|---|---|
| 1 | GROUNDING COPPER CABLE | NOTES 2 AND 8 | * | NOTES 2 AND 8 | * | | |
| 2 | TERMINAL CONNECTOR | NOTES 1 AND 2 | 3 | NOTES 1 AND 2 | 3 | | |
| 3 | HEXAGON HEAD SCREW | NOTES 4 AND 5 | 3 | NOTES 4 AND 5 | 3 | | |
| 4 | FLAT WASHER | NOTES 4 AND 5 | 3 | NOTES 4 AND 5 | 3 | | |
| 5 | LOCK WASHER | NOTES 4 AND 5 | 3 | NOTES 4 AND 5 | 3 | | |
| 6 | HEXAGON NUT | NOTES 4 AND 5 | 3 | NOTES 4 AND 5 | 3 | | |
| 7 | TERMINAL CONNECTOR (KS) | NOTES 1 AND 2 | * | NOTES 1 AND 2 | * | | |
| 8 | | | | | | | |
| 9 | | | | | | | |
| 10 | | | | | | | |
| 11 | | | | | | | |
| 12 | | | | | | | |
| 13 | | | | | | | |
| 14 | | | | | | | |

| CONTROL MULTI-CORE NON-ARMOURED CABLE GROUNDING NON-METALLIC CABLE GLAND/MCT | E 322 |
|---|---|

| PETROBRAS | DRAWING | No. I-DE-3010.00-5140-700-P4X-003 | REV. E |
|---|---|---|---|
| | AREA: | SHEET: 26 of 33 | |
| | TITLE: GROUNDING INSTALLATION TYPICAL DETAILS | INTERNAL | |
| | | ESUP | |

E

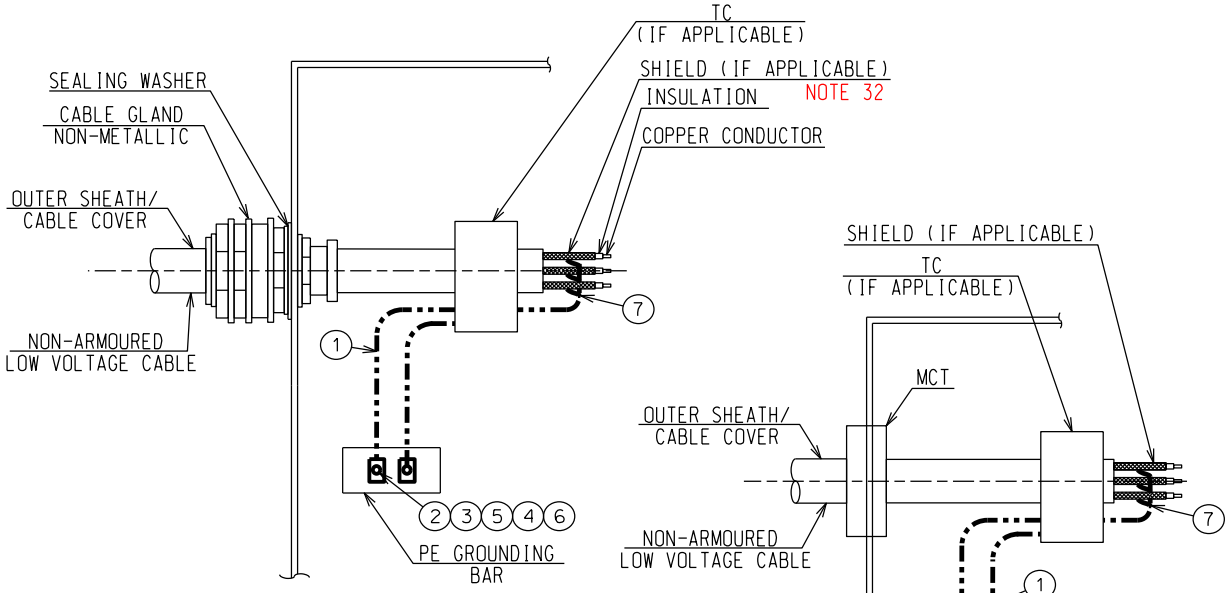


E323/1

E323/2

NOTE 35 E

| ITEM | MATERIAL DESCRIPTION | SYMBOLOGY E 323/1 | QT. | SYMBOLOGY E 323/2 | QT. | SYMBOLOGY | QT. |
|---|---|---|---|---|---|---|---|
| 1 | GROUNDING COPPER CABLE | NOTES 2 AND 8 | * | NOTES 2 AND 8 | * | | |
| 2 | TERMINAL CONNECTOR | NOTES 1 AND 2 | 3 | NOTES 1 AND 2 | 3 | | |
| 3 | HEXAGON HEAD SCREW | NOTES 4 AND 5 | 3 | NOTES 4 AND 5 | 3 | | |
| 4 | FLAT WASHER | NOTES 4 AND 5 | 3 | NOTES 4 AND 5 | 3 | | |
| 5 | LOCK WASHER | NOTES 4 AND 5 | 3 | NOTES 4 AND 5 | 3 | | |
| 6 | HEXAGON NUT | NOTES 4 AND 5 | 3 | NOTES 4 AND 5 | 3 | | |
| 7 | TERMINAL CONNECTOR (KS) | NOTES 1 AND 2 | 3 | NOTES 1 AND 2 | 3 | | |
| 8 | | | | | | | |
| 9 | | | | | | | |
| 10 | | | | | | | |
| 11 | | | | | | | |
| 12 | | | | | | | |
| 13 | | | | | | | |
| 14 | | | | | | | |

LOW-VOLTAGE MULTI-CORE NON-ARMOURED CABLE GROUNDING
NON-METALLIC CABLE GLAND/MCT

E 323

| PETROBRAS | DRAWING | No. I-DE-3010.00-5140-700-P4X-003 | REV. E |
|---|---|---|---|
| | AREA: | SHEET: 27 of 33 | |
| | TITLE: GROUNDING INSTALLATION TYPICAL DETAILS | INTERNAL | |
| | | ESUP | |

E

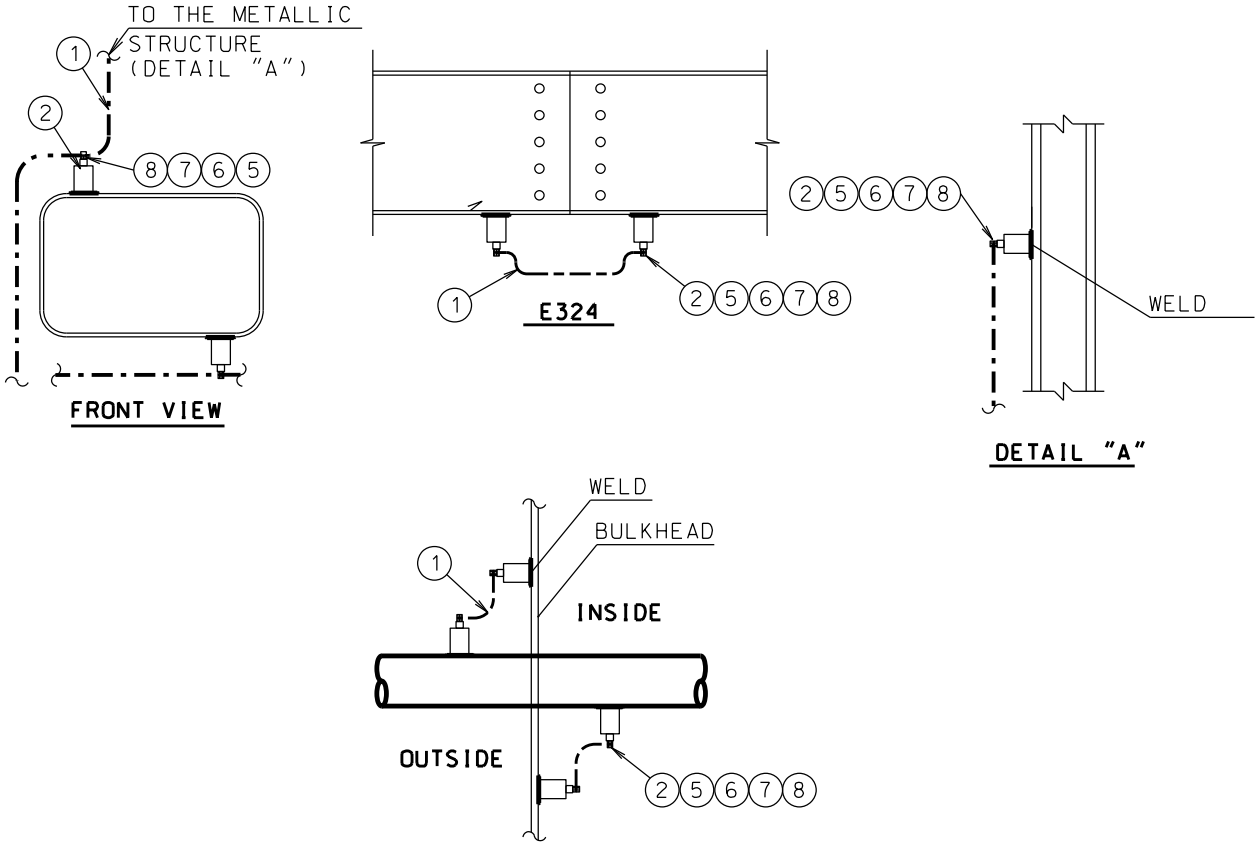


NOTE 27

| ITEM | MATERIAL DESCRIPTION | SYMBOLOGY E 324/1 | QT. | SYMBOLOGY | QT. | SYMBOLOGY | QT. |
|---|---|---|---|---|---|---|---|
| 1 | GROUNDING COPPER CABLE | NOTES 2 AND 8 | * | | | | |
| 2 | GROUNDING BOSS | NOTE 1 | 1 | | | | |
| 3 | TERMINAL CONNECTOR | NOTES 1 AND 2 | * | | | | |
| 4 | STEEL PLATE (50x50x6,3mm) | NOTE 3 | 1 | | | | |
| 5 | HEXAGON HEAD SCREW | NOTES 4 AND 5 | 1 | | | | |
| 6 | FLAT WASHER | NOTES 4 AND 5 | 1 | | | | |
| 7 | LOCK WASHER | NOTES 4 AND 5 | 1 | | | | |
| 8 | HEXAGON NUT | NOTES 4 AND 5 | 1 | | | | |
| 9 | TERMINAL CONNECTOR | NOTES 1 AND 2 | 2 | | | | |
| 10 | | | | | | | |
| 11 | | | | | | | |
| 12 | | | | | | | |
| 13 | | | | | | | |
| 14 | | | | | | | |

| VENTILATION DUTY GROUNDING | E 324 |
|---|---|

| PETROBRAS | DRAWING | No. I-DE-3010.00-5140-700-P4X-003 | REV. E |
|---|---|---|---|
| | AREA: | SHEET: 28 of 33 | |
| | TITLE: GROUNDING INSTALLATION TYPICAL DETAILS | INTERNAL | |
| | | ESUP | |

E

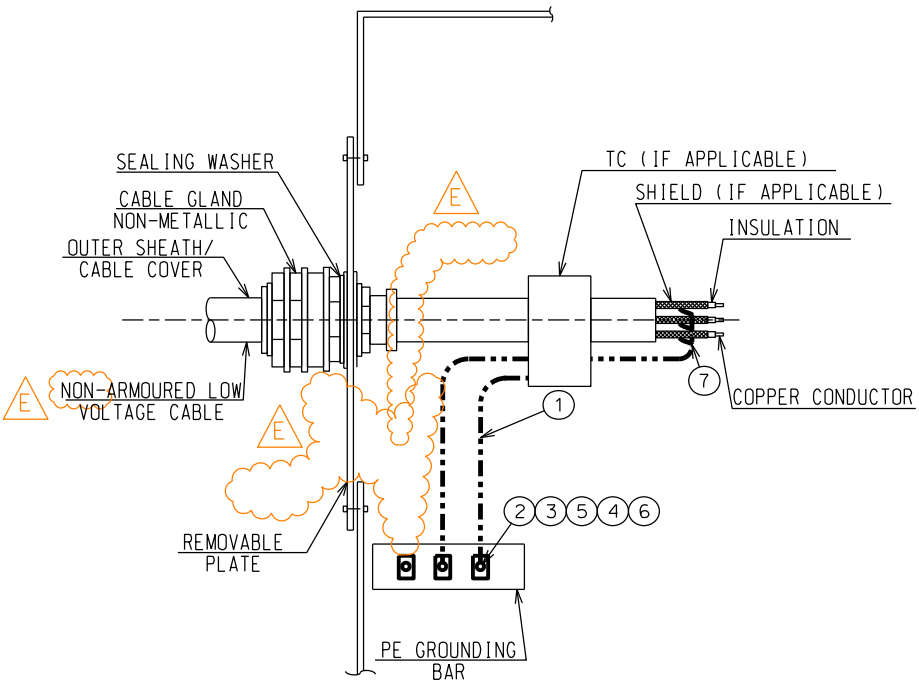


**E317/1**

NOTE 35
NOTE 36
E

(*) FOR MULTIPOLAR CABLE EACH ONE SHIELD SHALL BE CONNECTED TO THE PE GROUNDING BAR.
SEE IEC 60079-14, IEC 61892-6 AND IEC 61892-7.
SEE "SAFETY GROUNDING AND BONDING" IN I-ET-3010.00-5140-700-P4X-001- SPECIFICATION FOR ELECTRICAL DESIGN FOR OFFSHORE UNITS.

| | | SYMBOLOGY | | SYMBOLOGY | | SYMBOLOGY | |
|---|---|---|---|---|---|---|---|
| ITEM | MATERIAL DESCRIPTION | E 317/1 | QT. | E 317/2 | QT. | | QT. |
| 1 | GROUNDING COPPER CABLE | NOTES 2 AND 8 | * | | | | |
| 2 | TERMINAL CONNECTOR | NOTES 1 AND 2 | 3 | | | | |
| 3 | HEXAGON HEAD SCREW | NOTES 4 AND 5 | 3 | | | | |
| 4 | FLAT WASHER | NOTES 4 AND 5 | 3 | | | | |
| 5 | LOCK WASHER | NOTES 4 AND 5 | 3 | | | | |
| 6 | HEXAGON NUT | NOTES 4 AND 5 | 3 | | | | |
| 7 | TERMINAL CONNECTOR (KS) | NOTES 1 AND 2 | 3 | | | | |
| 8 | EARTH BOSS BY MAKER | NOTES 1, 2 AND 23 | – | | | | |
| 9 | TERMINAL CONNECTOR | NOTES 1 AND 2 | 2 | | | | |
| 10 | | | | | | | |
| 11 | | | | | | | |
| 12 | | | | | | | |
| 13 | | | | | | | |
| 14 | | | | | | | |

| | |
|---|---|
| DETAIL OF LOW-VOLTAGE SHIELD GROUNDING FOR NON-METALLIC CABLE GLAND (E) | E 325 |

| PETROBRAS | DRAWING | No. I-DE-3010.00-5140-700-P4X-003 | REV. E |
|---|---|---|---|
| | AREA: | SHEET: 29 of 33 | |
| | TITLE: GROUNDING INSTALLATION TYPICAL DETAILS | INTERNAL | |
| | | ESUP | |

E

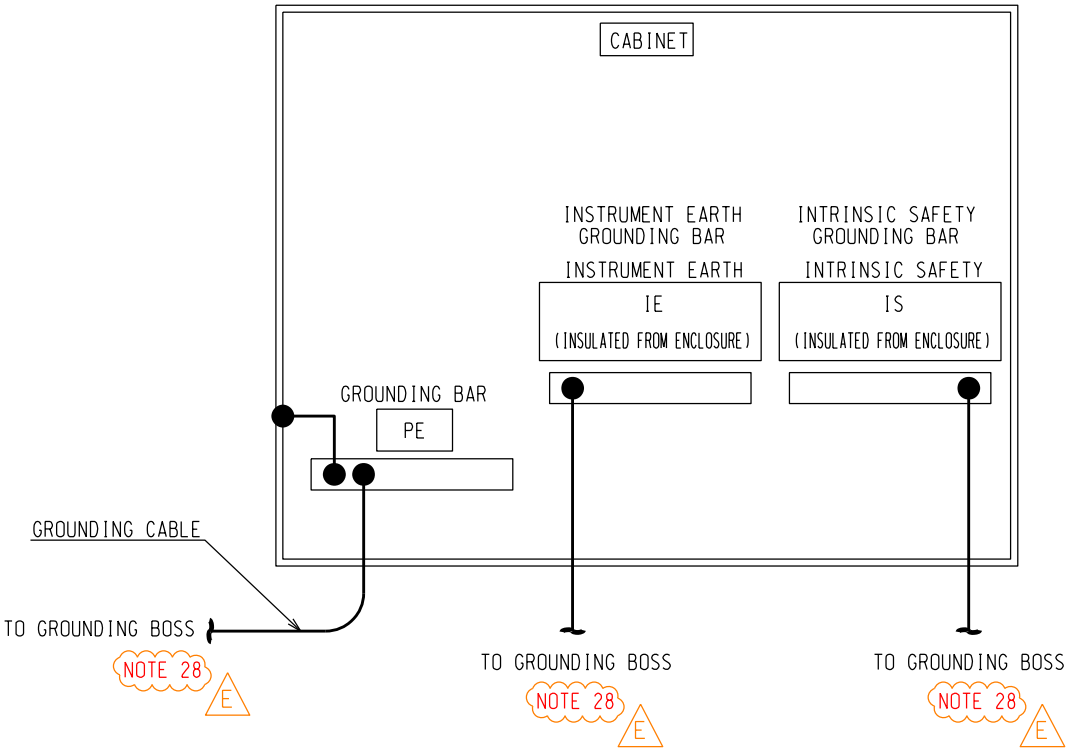


NOTE 8 AND 26

| INTERNAL PANEL GROUNDING BARS | E 326 |
|---|---|

| PETROBRAS | DRAWING | No. I-DE-3010.00-5140-700-P4X-003 | REV. E |
|---|---|---|---|
| | AREA: | SHEET: 30 of 33 | |
| | TITLE: GROUNDING INSTALLATION TYPICAL DETAILS | INTERNAL | |
| | | ESUP | |

E

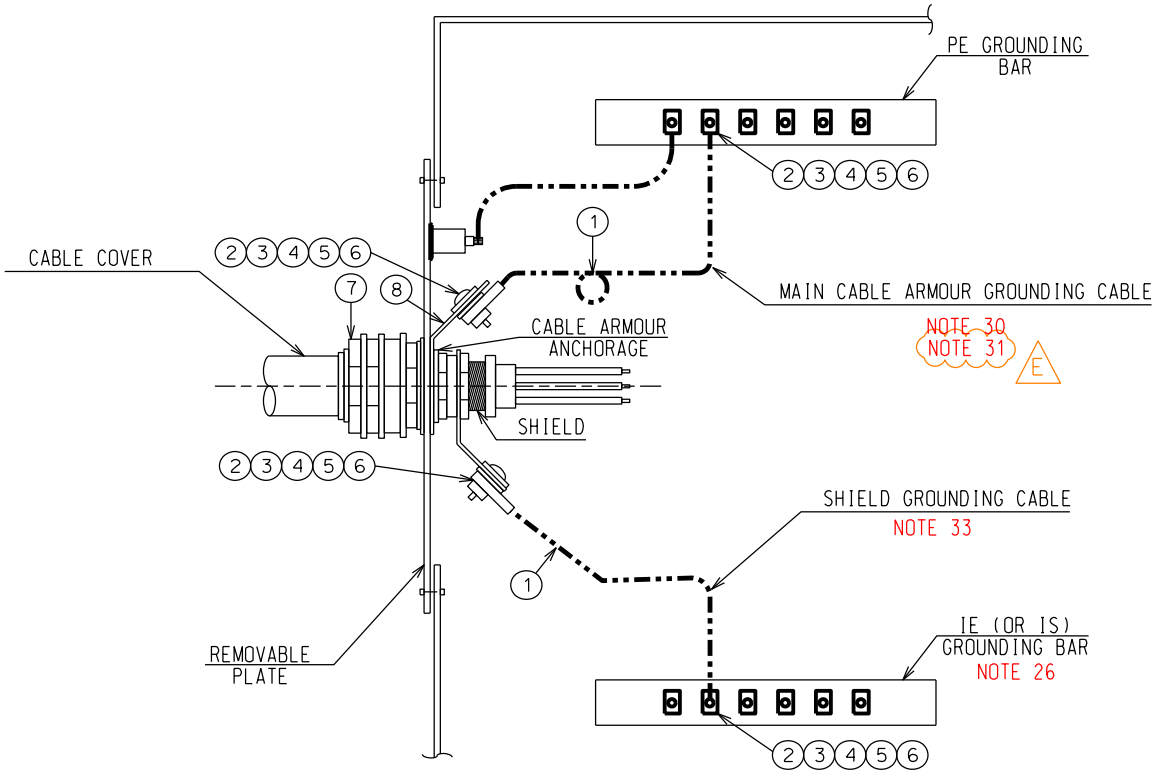


FOR MULTIPOLAR CABLE EACH ONE SHIELD SHALL BE CONNECTED TO THE IE (OR IS) GROUNDING BAR (SEE NOTE 33).
SEE IEC 60079-14, IEC 61892-6 AND IEC 61892-7.
SEE "SAFETY GROUNDING AND BONDING" IN I-ET-3010.00-5140-700-P4X-001- SPECIFICATION FOR ELECTRICAL DESIGN FOR OFFSHORE UNITS.

| | | SYMBOLOGY | | SYMBOLOGY | | SYMBOLOGY | |
|---|---|---|---|---|---|---|---|
| ITEM | MATERIAL DESCRIPTION | E 327/1 | QT. | | QT. | | QT. |
| 1 | GROUNDING COPPER CABLE | NOTES 2 AND 8 | * | | | | |
| 2 | TERMINAL CONNECTOR | NOTES 1 AND 2 | * | | | | |
| 3 | HEXAGON HEAD SCREW | NOTES 4 AND 5 | * | | | | |
| 4 | FLAT WASHER | NOTES 4 AND 5 | * | | | | |
| 5 | LOCK WASHER | NOTES 4 AND 5 | * | | | | |
| 6 | HEXAGON NUT | NOTES 4 AND 5 | * | | | | |
| 7 | CABLE GLAND | NOTES 5 AND 22 | 1 | | | | |
| 8 | EARTH TAG | NOTE 5 | 2 | | | | |
| 9 | | | | | | | |
| 10 | | | | | | | |
| 11 | | | | | | | |
| 12 | | | | | | | |
| 13 | | | | | | | |
| 14 | | | | | | | |

| CABLE GLAND FOR CONTROL CABLE | E 327 |
|---|---|

E

TABLE OF RECOMMENDED BONDING

| FLUID CHARACTERISTIC / INTERCONNECTION TYPES | FLUID CONDUCTIVITY | |
|---|---|---|
| | ⩽ 50 pS/m | > 50 pS/m |
| INTERCONNECTION BETWEEN FLANGES FITTED WITH NON-METALLIC GASKET | NECESSARY BONDING | NECESSARY BONDING |
| INTERCONNECTION BETWEEN FLANGES FITTED WITH METALLIC GASKET | NO BONDING | NO BONDING |

NOTE 21

| PETROBRAS | DRAWING | No. I-DE-3010.00-5140-700-P4X-003 | REV. E |
|---|---|---|---|
| | AREA: | SHEET: 32 of 33 | |
| | TITLE: GROUNDING INSTALLATION TYPICAL DETAILS | INTERNAL | |
| | | ESUP | |

## GENERAL NOTES

E

1- AFTER FIXING THE CABLE, A CORROSION PROTECTION COVER SHALL BE APPLIED TO THE CONNECTORS.

2- FOR GROUNDING CABLES CROSS-SECTION AREAS, SEE I-ET-3010.00-5140-700-P4X-001- SPECIFICATION FOR ELECTRICAL DESIGN FOR OFFSHORE UNITS.

3- THE STEEL PLATE SHALL HAVE ROUNDED CORNERS.

4- ALL SCREWS, NUTS, WASHERS AND CONNECTOR FOR FITTING EQUIPMENT SHALL BE MADE OF BICHROMATIZED STEEL OR STAINLESS STEEL AISI-316L, EXCEPT FOR APPLICATION IN CABLE TRAYS AND CHANNELS AND FOR APPLICATION IN PIPING INSIDE TANKS, WHERE ONLY STAINLESS STEEL AISI-316L SHALL BE USED.

5- DIMENSION BY FIELD.

6- QUANTITY WITH *, BY FIELD.

7- MEDIUM-VOLTAGE MOTORS AND GENERATORS SHALL HAVE TWO GROUNDING CONNECTORS IN OPPOSITE CORNERS.

8- SKIDS NOT WELDED TO STRUCTURE SHALL BE CONNECTED TO MODULE GROUNDING BOSS. ACCORDING TO I-ET-3010.00-5140-700-P4X-001 -SPECIFICATION FOR ELECTRICAL DESIGN FOR OFFSHORE UNITS "A WELD BEAD WITH AT LEAST 10cm LENGTH IS ACCEPTABLE IN ORDER TO ENSURE ELECTRICAL CONTINUITY BETWEEN SKIDS AND STRUCTURES (E.G. SUPPORTS) WELDED TO THE MAIN STRUCTURE" IF DOES NOT HAVE A STRUCTURE NEXT TO SKID, IT SHALL BE INSTALLED A BEAM WITH GROUNDING BOSS.

9- DEPENDING ON THE LOCATION, EQUIPMENT SHALL BE CONNECTED TO THE GROUNDING BOSS WELDED ON THE MODULE STRUCTURE (IF POSSIBLE BEAM) BESIDE THE SKID, IN CASE THESE CONNECTIONS WERE NOT POSSIBLE, THE CONNECTION SHALL BE MADE ACCORDING TO E316/2.

10- EXTERNAL CONNECTION ONLY IN CASES WITHOUT INTERNAL GROUNDING CONNECTOR.

11- THE 63A AND 32A SOCKET-OUTLETS SHALL BE GROUNDED IN THIS WAY. THE 16A SOCKET-OUTLETS SHALL BE GROUNDED BY POWER CABLE.

12- THE PIPING SHALL BE GROUNDED ACCORDING TO I-ET-3010.00-5140-700-P4X-001 -SPECIFICATION FOR ELECTRICAL DESIGN FOR OFFSHORE UNITS FOLLOWING STATEMENTS DESCRIBED IN ITEM "STATIC ELECTRICITY DISCHARGE PROTECTION"

13- NON-METALLIC PIPING BONDING SHALL COMPLY WITH REQUIREMENTS OF IMO RESOLUTION A.753 (18).

14- NECESSARY BONDING ONLY IF THE CABLE TRAY SECTIONS ARE NOT CONNECTED TO EACH OTHER BY MEANS OF SCREWED METAL PLATES. SEE I-ET-3010.00-5140-700-P4X-001 - SPECIFICATION FOR ELECTRICAL DESIGN FOR OFFSHORE UNITS.

15- THE METALLIC GRATING (STAIRS GRATING TOO) SHALL BE GROUNDED TO THE STRUCTURE IN TWO POINTS. IF METALLIC CLAMPS ARE USED, GROUNDING BONDINGS ARE NOT REQUIRED.

16- CABLE LENGTH SHALL ALLOW COLUMN MOTION. CABLE AND CONNECTORS DIAMETERS MAY BE LARGER, IF REQUIRED BY CLASSIFICATION SOCIETY.

17- FOR SOCKET-OUTLET POWER INSTALLATION TYPICAL DETAILS, SEE I-DE-3010.00-5140-700-P4X-002 - POWER INSTALLATION TYPICAL DETAILS.

18- EXCEPTION OF USE OF DETAILS "A" AND "B": SEE TABLE OF RECOMMENDED BONDING AND I-ET-3010.00-5140-700-P4X-001- SPECIFICATION FOR ELECTRICAL DESIGN FOR OFFSHORE UNITS.

19- THE GROUNDING BAR SHALL BE IN STAINLESS STEEL AISI 316L INSTALLED DIRECTLY USING WELD.

20- GROUNDING OF NON-METALLIC REMOVABLE FLOOR GRATING, NON-METALLIC CABLE TRAYS, NON-METALLIC LADDERS, NON-METALLIC CHANNELS AND WELDED SUPPORTS ARE NOT REQUIRED.

21- THE "TABLE OF RECOMMENDED BONDING" INDICATE IN WHICH CONDITIONS SHALL BE ADOPTED BONDING. ACCORDING TO API RP 2003. SEE ADDITIONAL REQUIREMENTS IN STATIC ELECTRICITY DISCHARGE PROTECTION IN - I-ET-3010.00-5140-700-P4X-001- SPECIFICATION FOR ELECTRICAL DESIGN FOR OFFSHORE UNITS.

22- CABLE GLANDS MATERIAL SHALL FOLLOW I-ET-3010.00-5140-700-P4X-002- SPECIFICATION FOR ELECTRICAL MATERIAL AND EQUIPMENT FOR OFFSHORE UNITS.

23- DIMENSION INDICATED IN THE TABLE OF DETAILS E 317, E 318, E 319, E 320 AND E 325 SHALL BE DEFINIED BY VENDOR. MATERIAL SPECIFICATION SHALL FOLLOW I-ET-3010.00-5140-700-P4X-002 - SPECIFICATION FOR ELECTRICAL MATERIAL AND EQUIPMENT FOR OFFSHORE UNITS.

24- CABLE GLANDS FOR INSTALLATION AT NON THREADED HOLES OF REMOVABLE PLATES OR STEEL SHEET ENCLOSURES SHALL HAVE CYLINDRICAL THREAD WITH LOCKNUT.

25- GROUNDING CABLE REQUIREMENTS SHALL FOLLOW I-ET-3010.00-5140-700-P4X-002 - SPECIFICATION FOR ELECTRICAL MATERIAL AND EQUIPMENT FOR OFFSHORE UNITS.

26- PANEL GROUNDING BARS ACCORDING TO IEC 61892-3 AND I-ET-3010.00-5140-700-P4X-001 - SPECIFICATION FOR ELECTRICAL DESIGN FOR OFFSHORE UNITS.

27- PIPES AND VENTILATION DUCTS SHALL BE INTERCONNECTED AND CONNECTED TO THE MAIN STRUCTURE AT THE POINTS WHERE THEY PENETRATE IT. FOR VENTILATION DUCTS LOCATED SUCH THAT THE CHANCE OF A LIGHTNING STRIKE HAS TO BE CONSIDERED, A BONDING CONDUCTOR WITH A CROSS SECTION AREA OF 35mm2 SHALL BE USED.

28- THERE SHALL BE DEDICATED EARTH BOSSES FOR IE AND IS GROUNDING. GROUNDING CABLE SHALL BE AS SHORT AS POSSIBLE. SAFETY GROUNDING EARTH BOSS SHALL BE LOCATED AT LEAST 5 (FIVE) METERS AWAY FROM THE IE AND IS EARTH BOSSES.

29- (*)EARTHING RESISTORS SHALL BE CONNECTED TO THE UNIT'S STRUCTURE OR HULL. SUITABLE DISCONNECTING LINKS SHALL BE PROVIDED FOR MEASURING PURPOSES. THE POINT OF CONNECTION SHALL BE SEPARATE FROM THAT PROVIDED AT THE UNIT'S STRUCTURE OR HULL FOR RADIO, RADAR AND COMMUNICATIONS CIRCUITS IN ORDER TO AVOID INTERFERENCE. IT SHALL FOLLOW IEC 61892-2 ACCORDINGLY.

30- CABLE ARMOURING SHALL BE FIXED AND GROUNDED TO THE CABLE GLAND AT BOTH ENDINGS OF THE CABLE (LOAD AND FEEDER PANEL). ARMOURING OF SINGLE-CORE CABLES SHALL BE GROUNDED ONLY ON ONE SIDE AND THE FLOATING SIDE SHALL BE PROPERLY INSULATED.
WHEN OPERATING WITH FREQUENCY CONVERTERS THE BEST SOLUTION SHALL BE EVALUATED.

| PETROBRAS | DRAWING | No. I-DE-3010.00-5140-700-P4X-003 | REV. E |
|---|---|---|---|
| | AREA: | SHEET: 33 of 33 | |
| | TITLE: GROUNDING INSTALLATION TYPICAL DETAILS | INTERNAL | |
| | | ESUP | |

## GENERAL NOTES

E

E 31- THE ARMOURING OF THE CABLES SHALL BE ATTACHED (GROUNDED) TO THE METALLIC CABLE-GLANDS. CABLE-GLANDS INSTALLED INTO ENTRIES OF NON-METALLIC REMOVABLE PLATES AND CABLE-GLANDS INSTALLED INTO NON-THREADED ENTRIES OF METALLIC ENCLOSURES AND REMOVABLE PLATES SHALL BE CONNECTED TO PE GROUNDING BAR THROUGH GROUNDING CABLES.
WHEN CABLES-GLANDS ARE SCREWED INTO THREADED ENTRIES OF METALLIC ENCLOSURES AND REMOVABLE PLATES, THE ENCLOSURE AND THE REMOVABLE PLATES SHALL BE CONNECTED TO PE GROUNDING BAR.

32- THE SHIELD CONNECTION FOR POWER CABLES, AS SHOWED ON DETAIL, IS VALID ONLY IN CASE THE SHIELD GO ON WITH CABLE TERMINATION.

E 33- THE SHIELD OF CONTROL AND SIGNAL CABLES SHALL BE GROUNDED ONLY ON ONE SIDE AND THE FLOATING SIDE SHALL BE PROPERLY INSULATED.
FOR CONTROL AND SIGNAL CABLES, THE SHIELD SHALL BE GROUNDED AT PANEL SIDE, EXCEPT FOR CASES WHEN THE SENSOR IS GROUNDED. IN THESE CASES, THE INSTRUMENT SIDE OF SHIELD SHALL BE GROUNDED AND THE PANEL SIDE SHALL BE INSULATED.

34- GROUNDING REQUIRED AT BOTH ENDS OF EACH CONTINUOUS SECTION OF METALLIC CABLE TRAY.

E 35- THE SHIELD OF THREE-CORE POWER CABLES SHALL BE GROUNDED AT BOTH ENDS (PANEL AND LOAD).
THE SHIELD OF SINGLE-CORE POWER CABLES SHALL BE GROUNDED AT ONLY ONE END. THE FLOATING END SHALL BE PROPERLY INSULATED. IF THE LOAD IS LOCATED IN HAZARDOUS AREA, THE LOAD SIDE SHALL BE THE GROUNDED ONE.

36- NON-METALLIC CABLE-GLANDS ARE NOT ALLOWED FOR ARMOURED CABLES.
NON-METALLIC CABLE-GLANDS ARE ALLOWED ONLY FOR NON-METALLIC ENCLOSURES.